Ingersoll Rand

Industrial Air Motors

Ingersoll Rand
Industrial Technologies

Repairs Done Right. Service Made Simple.

Proper service of Ingersoll-Rand/ARO air motors with quality-authorized parts will help prevent wear and tear, eliminate downtime and extend a product's life. That's why Ingersoll-Rand (IR) has created a program that provides service and repairs to the end user through the use of Authorized Service Agents.

This newly developed program ensures that Ingersoll-Rand maintenance and repair standards are met, through the use of genuine parts and service. Whether it's serious technical difficulties or just routine maintenance, products can be taken directly to any specified Authorized Service Agent. From there, the program has been set up to make certain that the air motor is put into the hands of reliable, fully-trained IR service technicians. This process ensures that you have access to the expertise and resources of a full service center, regardless of geographic location.

Program Features:

- One Face to the End User
- Quality repairs using genuine IR parts
- Access to an IR owned service center
- Fully trained service technicians using IR specified testing equipment
- Receive your quote in 48 hours or less
- 90 day repair warranty

Ingersoll Rand

(877) 258-0899

Table of Contents

		Page
Introduction and Product Overview		1
Air Motor Selection and Characteristics		3
In-Line Planetary Gear, Multi-Vane Air Motors		
0000-Series	0.10 hp	6
M002 Series	0.11 – 0.25 hp	8
000-Series	0.25 hp	11
M004 Series	0.31 – 0.50 hp	13
0-Series with 0-Series Gearing	0.50 – 0.60 hp	16
0-Series with 2200 Series Gearing	0.50 – 0.60 hp	18
M007 Series	0.61 – 0.85 hp	20
2200-Series with Thread-On Gearing	0.7 – 0.85 hp	24
2200-Series with Bolt-On Gearing	0.7 – 0.85 hp	26
2200-Series with 44-Series Gearing	0.65 – 0.90 hp	28
Series 1801 and 1841	1.10 – 1.40 hp	30
3800 and 3840 Series	1.35 – 1.55 hp	32
44-Series	1.90 – 2.00 hp	34
4800 and 4840 Series	3.00 – 3.80 hp	36
Spur Gear, Multi-Vane Air Motors		
17RA, 17RB, 34RA and 34RB Series	2.30 – 4.1 hp	38
48RA and 48RB Series	3.00 – 3.10 hp	40
92RA and 92RB Series	7.90 – 8.15 hp	42
92RM and 992RM Series	8.15 – 9.90 hp	44
Direct Drive Multi-Vane Air Motors		
MVA and M0V0 Series	1.93 – 10.5 hp	46
MRV Series	0.33 – 4.80 hp	50
Milling & Sawing Motors (In-Line Planetary Gear, Multi-Vane Air Motors)		
Overview and Reference chart		57
000-Series Milling Motors	0.25 hp	59
0-Series Milling Motors	0.60 hp	61
2200-Series Milling Motors	0.85 hp	63
2200-Series Milling Motors (Straddle)	0.85 hp	65
2200-Series Milling Motors (Side Mount)	0.85 hp	66
44-Series Milling Motors	2.00 hp	67

Table of Contents CONT.

Specialty Governed Motors		
Model 22N51-W/RC	1.75 hp	69
Series 551	5.60 hp	70
Direct and Geared Drive Piston Motors		
CC – KK Series	2.05 – 25.0 hp	71
MMP150 Series	16.0 hp	76
KK5B Series	29.0 – 30.0 hp	78
Components and Equipment		81
Accessories		84
Warranty Information		86
Index by Model number		87-90
Contact Information		Back Cover

Air Motors

IR AIR POWER

Creating sheer power from the natural environment, Ingersoll-Rand air motors are flexible, efficient alternatives to electric sources—perfect for a wide range of industrial applications. Consider these advantages:

- *Infinitely variable speeds and torques* via pressure regulation or air valves—no costly controls required
- *Instant starting, stopping and reversing* eliminates the delays of motor speed-up or slow-down periods
- *Will not overheat or burn out,* even when overloaded or run to stall
- *Safe operation in hazardous conditions,* with no electrical sparks or hydraulic fluids
- *Cool running characteristics minimize* the effects of hot, wet or dusty surroundings
- *Low maintenance,* based on simplicity of design and strength of construction
- *Excellent design flexibility*—a function of compact size, light weight, and high power output
- *Temperature range*—up to 150°F with standard lubrication and up to 300°F with high temperature lubrication

A FULL SPECTRUM OF SOLUTIONS

Ingersoll-Rand offers well over 200 cataloged models of air motors, with an extensive range of options:

- Reversible and non-reversible types
- Vane or piston configurations
- Geared and non-geared varieties
- 0.10 to 30 horsepower
- 23 rpm to 26,000 rpm speed ratings
- 0.10 ft-lb. to 1090 ft-lb. torque ratings

In addition, Ingersoll-Rand maintains data on hundreds of special application air motors that have solved problems for design engineers around the world over the years. You can access this invaluable resource by contacting your Ingersoll-Rand representative or distributor with details of your situation.

With over 125 years of engineering and manufacturing leadership, Ingersoll-Rand is the expert in air power.

IR AIR MOTOR PERFORMANCE CURVES

The performance curves shown throughout this catalog can assist you in matching specific air motor models to requirements. Performance data within one series may vary slightly, depending on gear ratios. When this occurs, median performance for that series is indicated. Follow these guidelines for interpreting the performance curves:

Horsepower

1. Locate operating speed on the correct horizontal axis of the bottom chart
2. Read *Horsepower* from the correct curve in the bottom chart

Torque

1. Locate operating speed on the correct horizontal axis of the bottom chart
2. Read *Torque* from the correct curve in the bottom chart

Air Consumption

1. Locate operating speed on the correct horizontal axis on the bottom chart
2. Read *Air Consumption* from the correct curve in the top chart

Maximum Allowable Shaft Radial Load

On applications where Shaft Radial Load is a factor:

1. Locate operating speed on the horizontal axis of the top chart
2. Read *Shaft Radial Load* on the correct Load Curve in the top chart

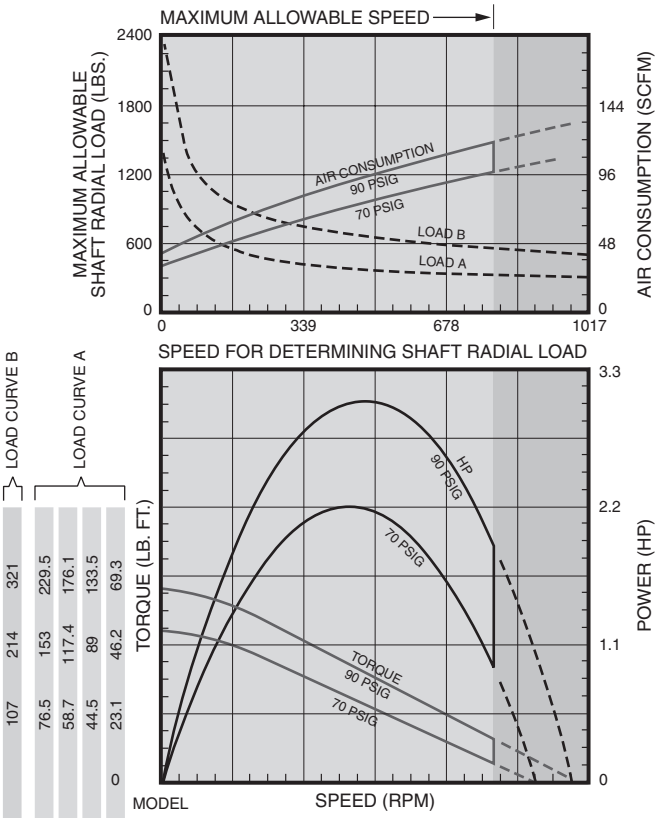

LOAD CURVE B	LOAD CURVE A					
321	229.5	176.1	133.5	69.3		
214	153	117.4	89	46.2		
107	76.5	58.7	44.5	23.1	0	

MODEL			
4840M	339	678	1017
4840P	165	330	495
4840Q	122	244	366
4840S	89	178	267
4840U	59	118	177

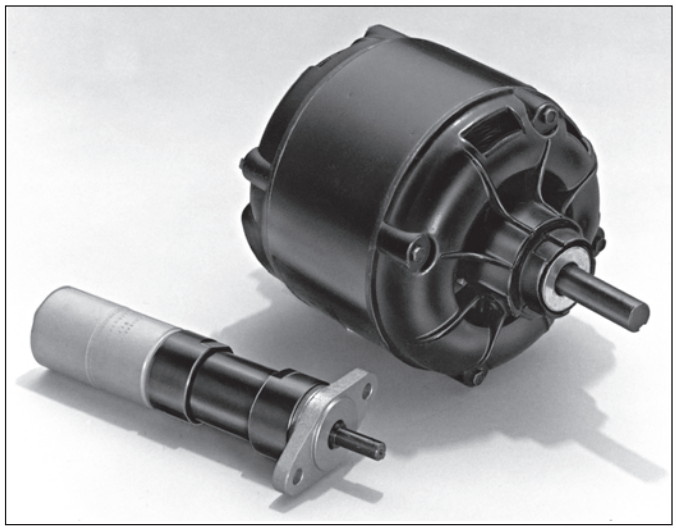

Two 1/3 Horsepower Motors

The Ingersoll-Rand reversible Series M004 Air Motor shown weighs only 2 ⅜ lbs. It has integral gear reduction of 33 to 1 and a free speed of 450 rpm. The comparable horsepower 110 volt electric motor, with a free speed of 1725 rpm, weighs 15 ½ lbs.

AIR MOTOR SELECTION AND CHARACTERISTICS

Ingersoll-Rand offers two basic types of Air Motors:

Vane Motors
Are smaller, lighter and less expensive than piston motors of similar power. Simple in design and construction, they can be operated in most any position. Vane motors are available in a broad range of speeds, torques and power and are the most widely used type of air motor.

Radial Piston Motors
Operate at lower speeds than vane motors. Have excellent starting and speed control. Especially good for "lugging" heavy loads at slow speed. Standard operational position is horizontal.

Reversible/Non-Reversible Air Motors
Non-reversible air motors are rated at slightly higher speeds, torques, and horsepowers than reversible motors of the same family.

Air Pressure
When selecting air motors, remember that the specification listings show only one set of performance figures, at a particular pressure —90 psig. Air motors are designed to produce optimum performance at this pressure.

Many other speeds, torques and power can be obtained from the same motor by regulating the pressure, air supply or exhaust. While they will operate at pressures below 40 psig, their performance may not be consistent. They can also be operated above 100 psig, but often at the expense of increased maintenance.

A good rule to follow is to size an air motor based on approximately 70% of the lowest available air pressure. This will allow additional power for starting and possible overloading. See page 5 for performance characteristics at various air pressures.

Maximum Power
Ungoverned air motors develop maximum horsepower at approximately 50% of free (unloaded) speed while governed motors reach their peak horsepower at about 80% of free speed. The only governed motors in this catalog are the 22 and 55 Series listed on pages 26 and 27.

Desired Operating Speed
The desired operating speed, not the free and unloaded speed should be considered when selecting air motors.

Ungoverned air motors should not be run unloaded. The performance curves in this catalog indicate the maximum speeds at which the motor should be operated. The nameplate stamped speed is present for identification only.

Required Torque
Equally important as the speed at which an air motor is to be run is the required torque. The combination of the two factors—speed and torque—determine the power of the desired motor. Care should be taken to differentiate between stall (maximum) and running torques when selecting air motors.

Speed and Torque
Starting torques are approximately 75% of stall torques.

Operating or running torques at any speed can be approximated from motor performance curves—or calculated using the formula:

$$\text{Torque (lb.-ft.)} = \frac{\text{Horsepower x 5250}}{\text{speed (revolutions per minute)}}$$

$$\text{Torque (Nm)} = \frac{\text{Kilowatts x 9550}}{\text{speed (revolutions per minute)}}$$

Shaft Radial Loads
When an air motor is to be used with a pulley, sprocket, or gear on the shaft, the overhung load (perpendicular to the shaft), commonly called "shaft radial loading" must be considered. It is shown in the performance curves and is generally assumed to be applied at the mid-point of the keyway of the shaft.

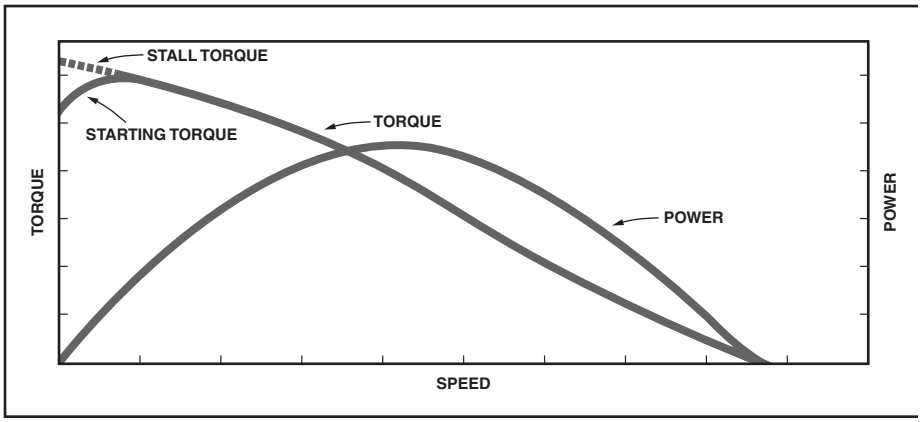

Fig. 1. Torque and power curves for a typical air motor. Torque is maximum at zero speed and zero at free speed. Any loading will slow the motor. As the load increases, the speed decreases and the torque increases until the motor stalls. If the load is decreased, the motor speed increases and its torque output decreases to match the applied load.

AIR MOTOR SELECTION AND CHARACTERISTICS (CONT.)

Air System and Supply
Once an air motor has been selected, it is important to ensure that the desired air pressure is available at the motor, ***while the motor is operating.*** A pressure reading at the compressor does not mean that the same pressure will be available to an operating air motor, because of possible restrictions and friction losses in the air system. Exhaust restrictions can also affect air motor operation, and are often the cause of performance problems.

Inlet Controls
When installing reversible air motors, a four-way valve or two three-way valves should be used to prevent blockage of the secondary Exhaust Port. This is the opposite Rotation Port to that which is being pressurized.

Replacing Electric Motors with Air Motors
Electric motors, with the exception of series wound direct current motors, have entirely different performance characteristics than air motors. Therefore, their torque and speed curves will not match. Many electric motors are oversized to allow for overloading and lower power air motors can be used as replacements.

Ingersoll-Rand Assistance
Your Ingersoll-Rand Air Motor distributor and factory representative are anxious to help with motor problems, applications and selections.

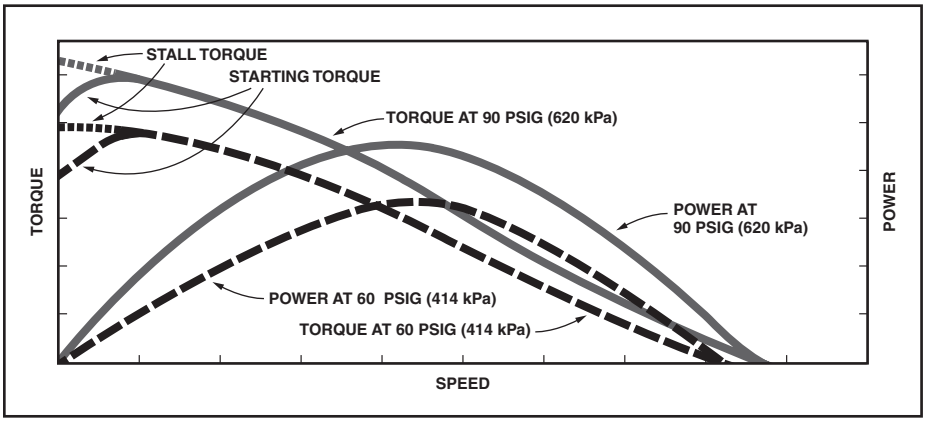

Fig. 2. Typical Air Motor torque and power curves at two different air pressures. Note that speed, torque and power decrease as the air pressure decreases.

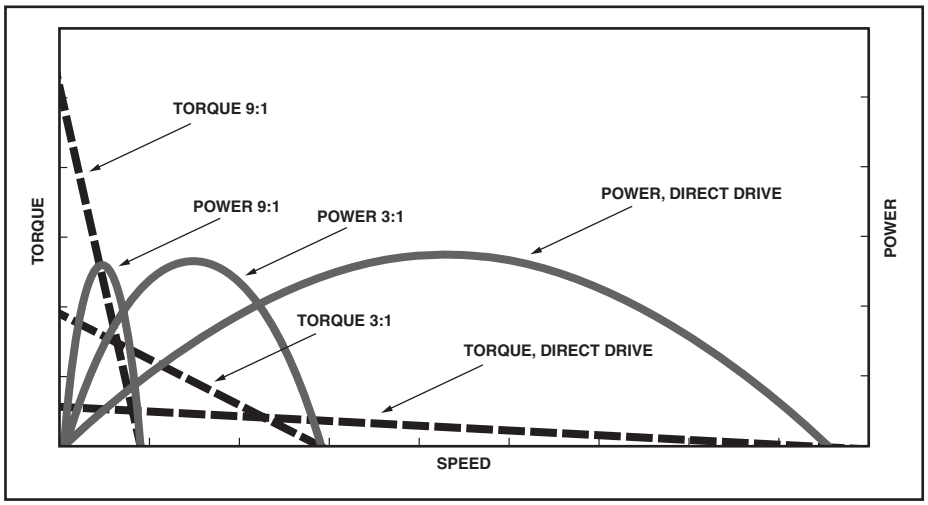

Fig. 3. Torque and power curves for geared and nongeared motors. Note that reducing rpm by gearing steepens the torque curve while maintaining power. Gearing is often used to reduce the speed and increase the torque of air motors. The greater the gear reduction, the steeper will be the torque curve; thus, the higher speed motor will be more susceptible to a drop in speed as a load is applied than the slower speed motor with additional gearing.

HOW TO DETERMINE PERFORMANCE CHARACTERISTICS AT AIR PRESSURES OTHER THAN 90 PSIG

As air pressure changes, the performance characteristics will change by the percentages given below.

Ungoverned Air Motors

Air Pressure (psig)	Free Speed (rpm)	Air Consumption at Free Speed (scfm)	Maximum Power (hp)	Speed at Maximum Horsepower (rpm)	Torque at Maximum Horsepower (lb.-ft.)	Air Consumption at Max. Power (scfm)	Stall or Starting Torque (lb.-ft.)
40	80%	45%	30%	80%	37.5%	45%	45%
50	84%	56%	44%	84%	52.4%	56%	56%
60	88%	67%	58%	88%	65.9%	67%	67%
70	92%	78%	72%	92%	78.3%	78%	78%
80	96%	89%	86%	96%	89.6%	89%	89%
90	100%	100%	100%	100%	100.0%	100%	100%
100	104%	111%	114%	104%	109.6%	111%	111%

Example: Knowing the performance characteristics of a Model 3840P reversible ungoverned Air Motor at 90 psig (620 kPa) it is a simple matter to determine its characteristics at another air pressure. Using the percentages from the table for 60 psig (414 kPa), the performance becomes:

Characteristic	Performance At 90 psig		Percentage Reduction		Performance At 60 psig
Maximum Power (hp)	1.35	x	58%	=	.78
Free Speed (rpm)	440	x	88%	=	387
Speed at Max Power (rpm)	215	x	88%	=	189
Max (Stall) Torque (lb.-ft.)	53.5	x	67%	=	35.8
Torque at Max Power (lb.-ft.)	33	x	65.9%	=	21.7
Starting Torque (lb.-ft.)	40	x	67%	=	26.8
Air Consumption at Free Speed (scfm)	54	x	67%	=	36.2
Air Consumption at Max HP (scfm)	44	x	67%	=	29.5

Air Supply or Exhaust Regulation

Reducing or restricting the amount of air supplied to the motor has a similar effect to reducing the air pressure.

Choking or restricting the exhaust has a somewhat different effect, with the speed decreasing much more than the torque.

The effects of changes in pressure, air supply and exhaust regulation are summarized in the table at the right:

Exact variations in performance with "choked" motors are not tabulated; however, "on the job" tests will usually produce the desired results; sometimes from a combination of pressure adjustments and inlet and exhaust restrictions.

Air Regulation	Speed	Torque
Reduced air pressure, or restricting volume of air to motor	Reduced	Greatly Reduced
Choking or restricting exhaust	Greatly Reduced	Reduced

0000-Series Power Motors

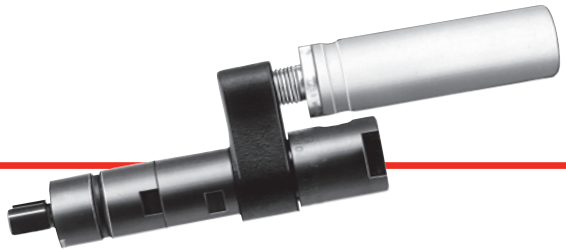

SPECIFICATIONS

MODEL	SPINDLE	R.P.M. FREE SPEED	R.P.M. LOAD SPEED @MAX. H.P.	TORQUE STALL lb. ft.	TORQUE STALL Nm	TORQUE OUTPUT @MAX. H.P. lb. ft.	TORQUE OUTPUT @MAX. H.P. Nm	AIR CONSUMPTION @FREE SPEED SCFM	AIR CONSUMPTION @FREE SPEED L/s	SOUND LEVEL @FREE SPEED dB(A)	WEIGHT lbs.	WEIGHT kg.	GEAR REDUCTION
NON-REVERSIBLE - .10 H.P.													
8610-A	3/8" Keyed	1,000	500	1.8	2.4	1.05	1.4	9.5	4.5	80	90	.40	Double
8611-A	3/8" Keyed	5,000	2,500	.42	.6	.21	.3	9.5	4.5	80	80	.36	Single
8616-A	3/8"-24 Th'd.	1,000	500	1.8	2.4	1.05	1.4	9.5	4.5	80	.90	.40	Double
8617-A	3/8"-24 Th'd.	5,000	2,500	.42	.6	.21	.3	9.5	4.5	80	.80	.36	Single
8618-A	3/8"-24 Th'd.	25,000	13,000	.10	.1	.04	.05	9.5	4.5	80	.80	.36	Single
REVERSIBLE - .10 H.P.													
8613-A	3/8" Keyed	1,000	500	1.8	2.6	1.05	1.4	11.5	5.4	80*	.90	.40	Double
8614-A	3/8" Keyed	5,000	2,500	.42	.6	.21	.3	11.5	5.4	80*	.80	.36	Single

*Requires installation for reversible motors - shown on page 85.

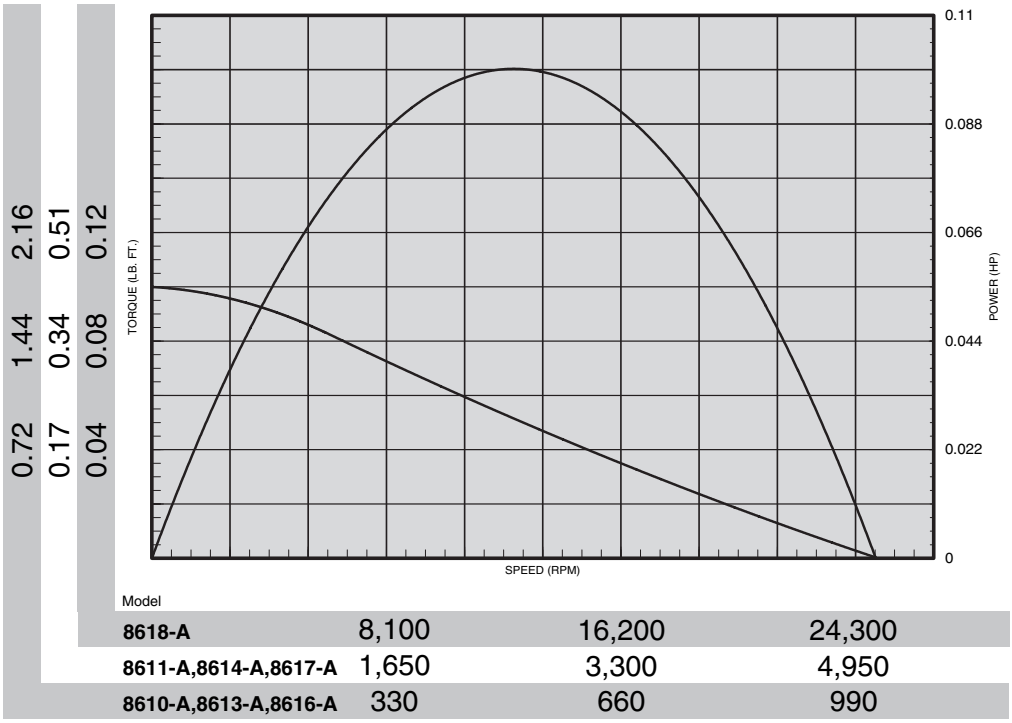

STANDARD EQUIPMENT

Steel motor housing, flush-type grease fittings at rotation points for gear and bearing lubrication, exhaust manifold rotatable within 360°, and muffler.

EQUIPMENT OPTIONS

41058 Flange Bracket
41057 Foot Bracket

OPTIONS FOR MOTORS WITH THREAD SPINDLES

30384-5 3/8" (9.5 mm) Male Square-Drive Adapter.

30384-9 1/2" (12.7 mm) Male Square-Drive Adapter.

30712 1/4" (6.4 mm) Female Hex Ball-Lock Adapter for screwdriver bits.

47340 1/4" (6.4 mm) Capacity Drill Chuck.

41058

41057

0000-SERIES AND MOUNTING ACCESSORY DIMENSIONS

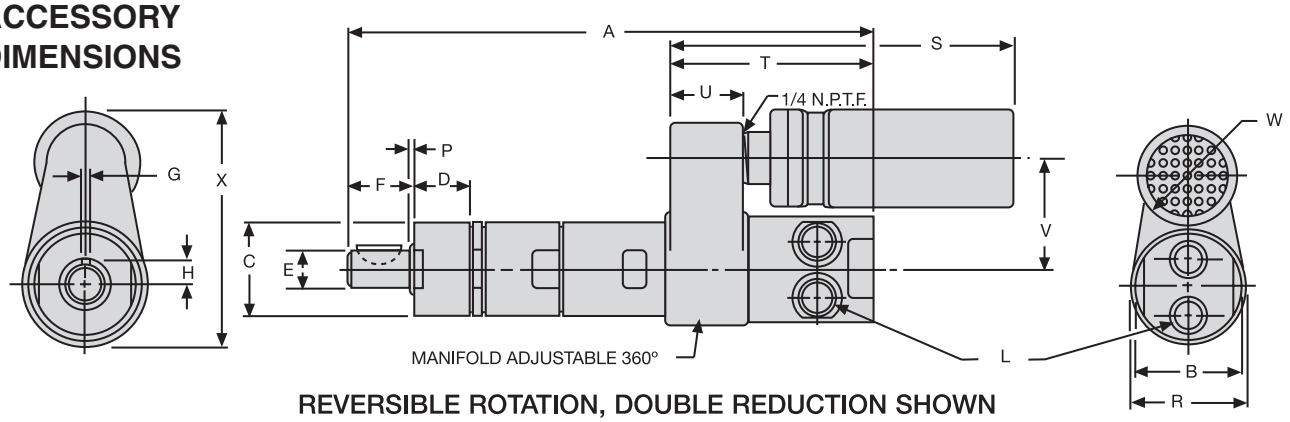

REVERSIBLE ROTATION, DOUBLE REDUCTION SHOWN

Gear Reduction	DIMENSION A Models 8617-A, 8618-A	Model 8616-A	8611-A, 8612-A 8614-A, 8615-A	Models 8610-A, 8613-A
Single	4-7/16 113 mm	—	4-1/2 114 mm	—
Double	—	5-7/32 132 mm	—	5-9/32 134 mm

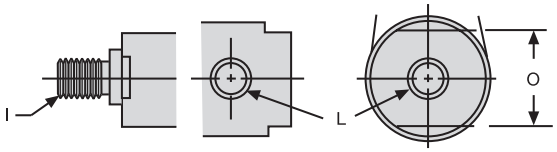

THREADED SPINDLE

AIR INLETS FORWARD-ROTATION MOTORS

Scale	B	C	D	E	F-Keyed Spindle	F-Th'd. Spindle	G	H	I	L	O
Inches	1-1/16	.936 .937	.580 .590	.374 .375	.644 .691	.581 .628	.0938 .0948	.228 .238	3/8"-24 UNF-2A Th'd.	1/8 NPTF Air Inlet	7/8
mm	27	23.77 23.80	14.73 14.99	9.50 9.53	16.36 17.55	14.76 15.95	2.38 2.41	5.79 6.05			22

Scale	P-Keyed Spindle	P-Th'd Spindle	R	S Reversible Direction	S Single Direction	T	U	V	W	X
Inches	.149 .186	.024 .061	1-1/8	3-7/16	4-7/16	2-1/32	3/4	1-1/8	1	2-3/16
mm	3.78 4.72	.61 1.55	28	87 mm	113 mm	51	19	28	25	55

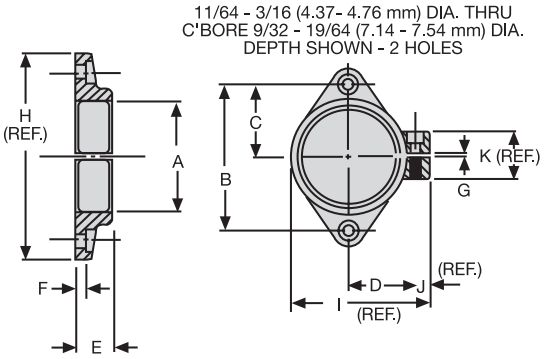

41058 FLANGE MOUNTING BRACKET

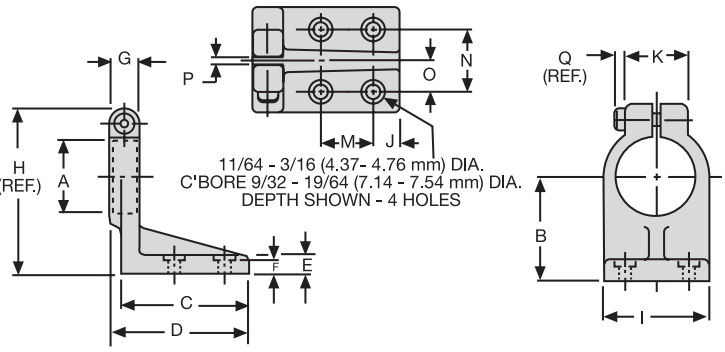

41057 FOOT MOUNTING BRACKET

Scale	A	B	C	D	E	F
Inches	.937 .938	1.745 1.755	.870 .880	.677 .697	.365 .385	.177 .197
mm	23.80 23.83	44.32 44.58	22.10 22.35	17.20 17.45	9.27 9.78	4.50 5.00

Scale	G	H	I	J	K
Inches	1/64 3/64	2-1/8	1-1/2	3/16	3/4
mm	0.40 1.19	53.98	38.10	4.76	19.05

Scale	A	B	C	D	E	F	G	H
Inches	.937 .938	1.249 1.251	1.609 1.640	1.734 1.765	.240 .260	.177 .197	.182 .192	2-7/32
mm	23.80 23.83	31.72 31.78	40.87 41.66	44.04 44.83	6.10 6.60	4.50 5.00	4.62 4.88	56.36

Scale	I	J	K	M	N	O	P	Q
Inches	1.234 1.265	.296 .328	.734 .765	.620 .630	.745 .755	.370 .380	.046 .078	1/8
mm	31.34 32.13	7.52 8.33	18.64 19.43	15.75 16.00	18.92 19.18	9.40 9.65	1.17 1.98	3.18

Series M002 Multi-Vane Air Motors

SPECIFICATIONS

Model	Max. Power		Speed at Max. Power	Free Speed▲	Starting Torque		Stall Torque		Air Consumption at Max. Power		Weight	
	hp	kw	rpm	rpm	lb.-ft.	Nm	lb.-ft.	Nm	scfm	m^3/m	lb.	kg
Non-Reversible Direction of rotation is counterclockwise when facing the shaft.												
M002RHR000AR3	0.25	0.19	12,250	26,000	0.15	0.20	0.20	0.27	12.0	0.34	1	0.46
M002RHR004AR3	0.22	0.16	3250	6920	0.45	0.61	0.61	0.83	11.9	0.34	1	0.46
M002RHR006AR3	0.22	0.16	2060	4385	0.72	0.98	0.96	1.30	11 9	0.34	1⅛	0.49
M002RHR008AR3	0.22	0.16	1520	3240	0.98	1.33	1.31	1.78	11.9	0.34	1	0.46
M002RHR013AR3	0.19	0.14	880	1840	1.36	2.50	1.82	2.47	11.8	0.33	1⅛	0.50
M002RHR021AR3	0.19	0.14	555	1165	2.16	2.93	2.88	3.90	11.8	0.33	1⅛	0.50
M002RHR028AR3	0.19	0.14	410	860	2.92	3.96	3.90	5.29	11.8	0.33	1⅛	0.50
M002RHR044AR3	0.19	0.14	262	545	4.61	6.25	6.15	8.34	11.8	0.33	1⅛	0.50
M002RHR101AR3	0.16	0.12	112	228	*8.32	*11.2	*11.1	*15.0	11.7	0.33	1 3/16	0.54
M002RHR159AR3	0.16	0.12	71	145	*13.1	*17.7	*17.5	*23.7	11.7	0.33	1 3/16	0.54
Reversible												
M002RVR000AR3	0.20	0.15	11,500	23,000	0.13	0.18	0.18	0.24	9.8	0.28	1	0.46
M002RVR004AR3	0.17	0.13	3045	6090	0.40	0.54	0.54	0.73	9.7	0.27	1	0.46
M002RVR006AR3	0.17	0.13	1930	3860	0.64	0.87	0.86	1.17	9.7	0.27	1⅛	0.49
M002RVR008AR3	0.17	0.13	1425	2850	0.87	1.18	1.16	1.57	9.7	0.27	1	0.46
M002RVR013AR3	0.14	0.10	820	1645	1.17	1.58	1.56	2.11	9.6	0.27	1⅛	0.50
M002RVR021AR3	0.14	0.10	520	1045	1.85	2.51	2.47	3.35	9.6	0.27	1⅛	0.50
M002RVR028AR3	0.14	0.10	385	770	2.50	3.39	3.34	4.53	9.6	0.27	1⅛	0.50
M002RVR044AR3	0.14	0.10	240	485	3.96	5.37	5.28	7.16	9.6	0.27	1⅛	0.50
M002RVR101AR3	0.11	0.08	104	209	*6.78	*9.19	*9.05	*12.2	9.5	0.27	1 3/16	0.54
M002RVR159AR3	0.11	0.08	66	132	*10.7	*14.5	*14.2	*19.3	9.5	0.27	1 3/16	0.54

▲ALL models must be operated with sufficient load to prevent speed from exceeding maximum allowable speed shown on performance curve.
* Applications with these models must be limited to 12 lb.-ft. (16.3 Nm) torque.
Performance figures are at 90 psig (620 kPa) air pressure.

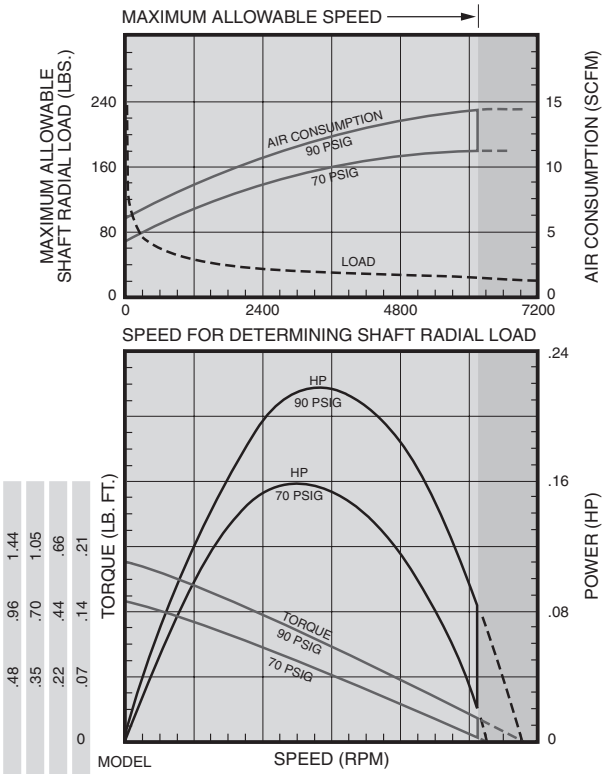

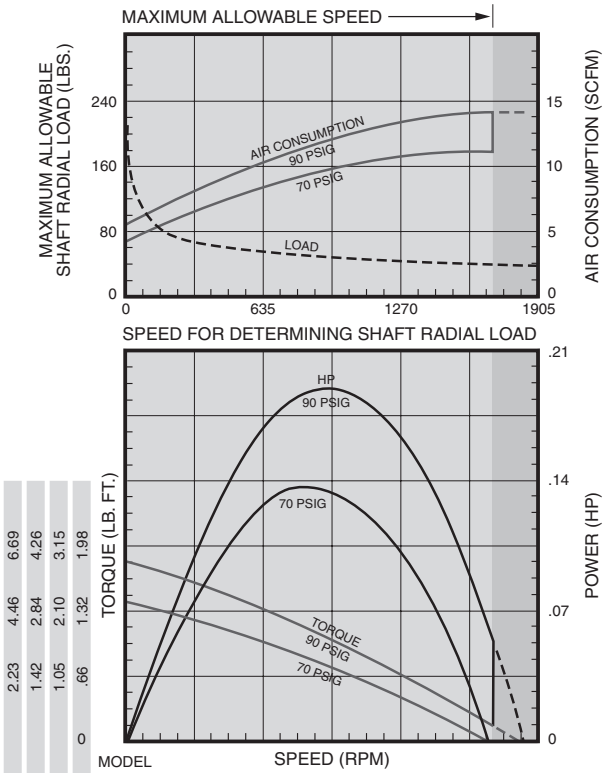

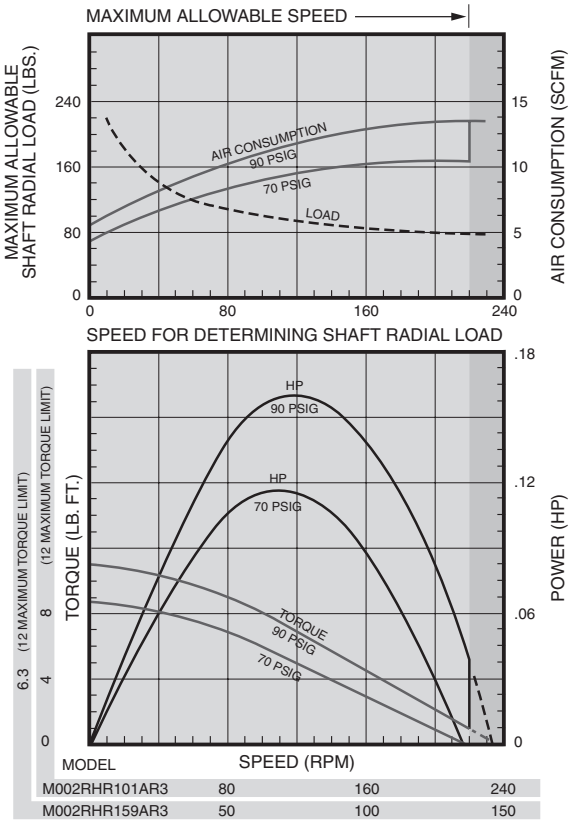
MAXIMUM ALLOWABLE SPEED
MAXIMUM ALLOWABLE SHAFT RADIAL LOAD (LBS.)
AIR CONSUMPTION (SCFM)
AIR CONSUMPTION
90 PSIG
70 PSIG
LOAD
SPEED FOR DETERMINING SHAFT RADIAL LOAD
HP
90 PSIG
HP
70 PSIG
TORQUE
90 PSIG
70 PSIG
TORQUE (LB. FT.)
POWER (HP)
(12 MAXIMUM TORQUE LIMIT)
MODEL
SPEED (RPM)
M002RHR101AR3 80 160 240
M002RHR159AR3 50 100 150

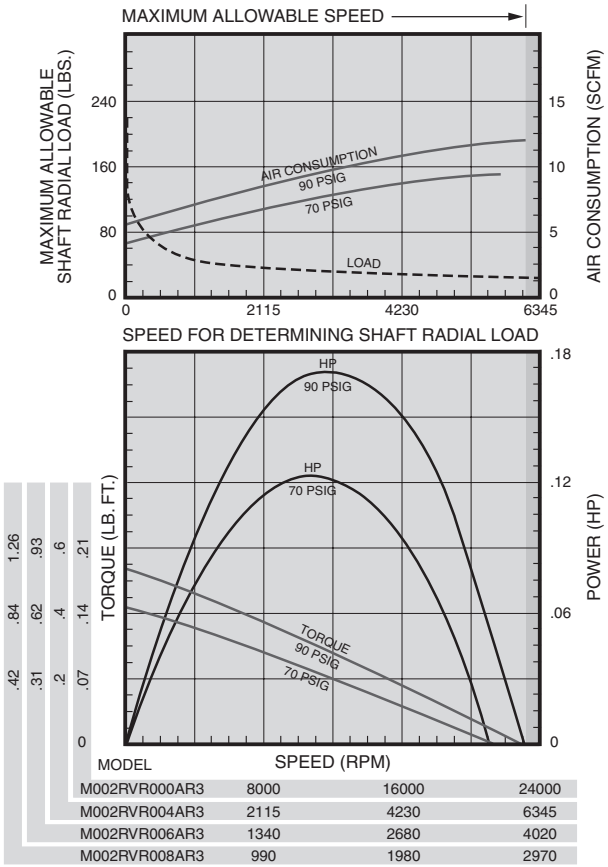
MAXIMUM ALLOWABLE SPEED
MAXIMUM ALLOWABLE SHAFT RADIAL LOAD (LBS.)
AIR CONSUMPTION (SCFM)
AIR CONSUMPTION
90 PSIG
70 PSIG
LOAD
SPEED FOR DETERMINING SHAFT RADIAL LOAD
HP
90 PSIG
HP
70 PSIG
TORQUE
90 PSIG
70 PSIG
TORQUE (LB. FT.)
POWER (HP)
MODEL
SPEED (RPM)
M002RVR000AR3 8000 16000 24000
M002RVR004AR3 2115 4230 6345
M002RVR006AR3 1340 2680 4020
M002RVR008AR3 990 1980 2970

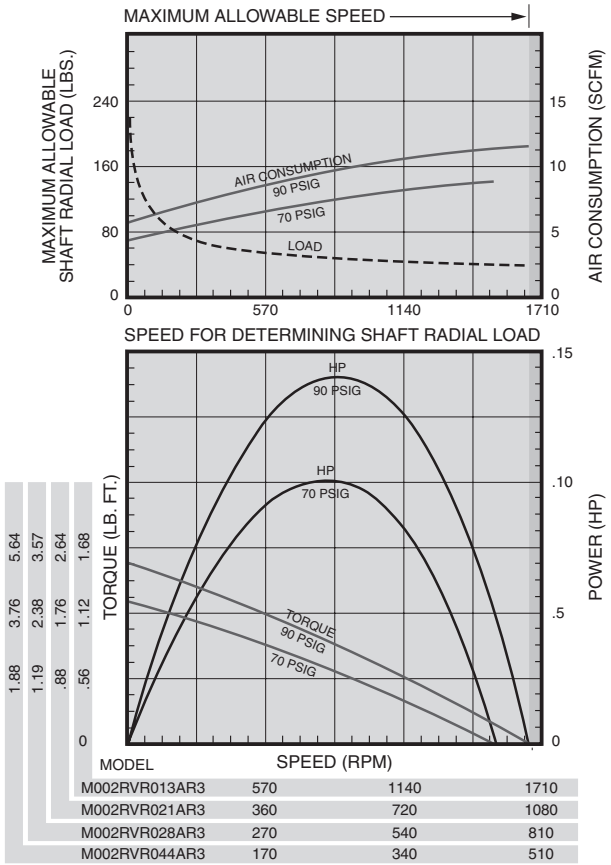
MAXIMUM ALLOWABLE SPEED
MAXIMUM ALLOWABLE SHAFT RADIAL LOAD (LBS.)
AIR CONSUMPTION (SCFM)
AIR CONSUMPTION
90 PSIG
70 PSIG
LOAD
SPEED FOR DETERMINING SHAFT RADIAL LOAD
HP
90 PSIG
HP
70 PSIG
TORQUE
90 PSIG
70 PSIG
TORQUE (LB. FT.)
POWER (HP)
MODEL
SPEED (RPM)
M002RVR013AR3 570 1140 1710
M002RVR021AR3 360 720 1080
M002RVR028AR3 270 540 810
M002RVR044AR3 170 340 510

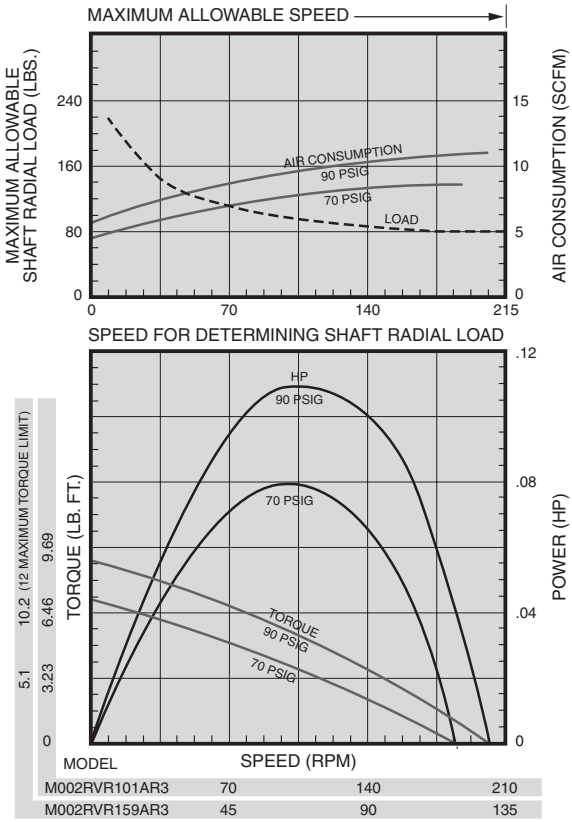
MAXIMUM ALLOWABLE SPEED
MAXIMUM ALLOWABLE SHAFT RADIAL LOAD (LBS.)
AIR CONSUMPTION (SCFM)
AIR CONSUMPTION
90 PSIG
70 PSIG
LOAD
SPEED FOR DETERMINING SHAFT RADIAL LOAD
HP
90 PSIG
70 PSIG
TORQUE
90 PSIG
70 PSIG
TORQUE (LB. FT.)
POWER (HP)
(12 MAXIMUM TORQUE LIMIT)
MODEL
SPEED (RPM)
M002RVR101AR3 70 140 210
M002RVR159AR3 45 90 135

Series M002 Multi-Vane Air Motors

SERIES M002 DIMENSIONS

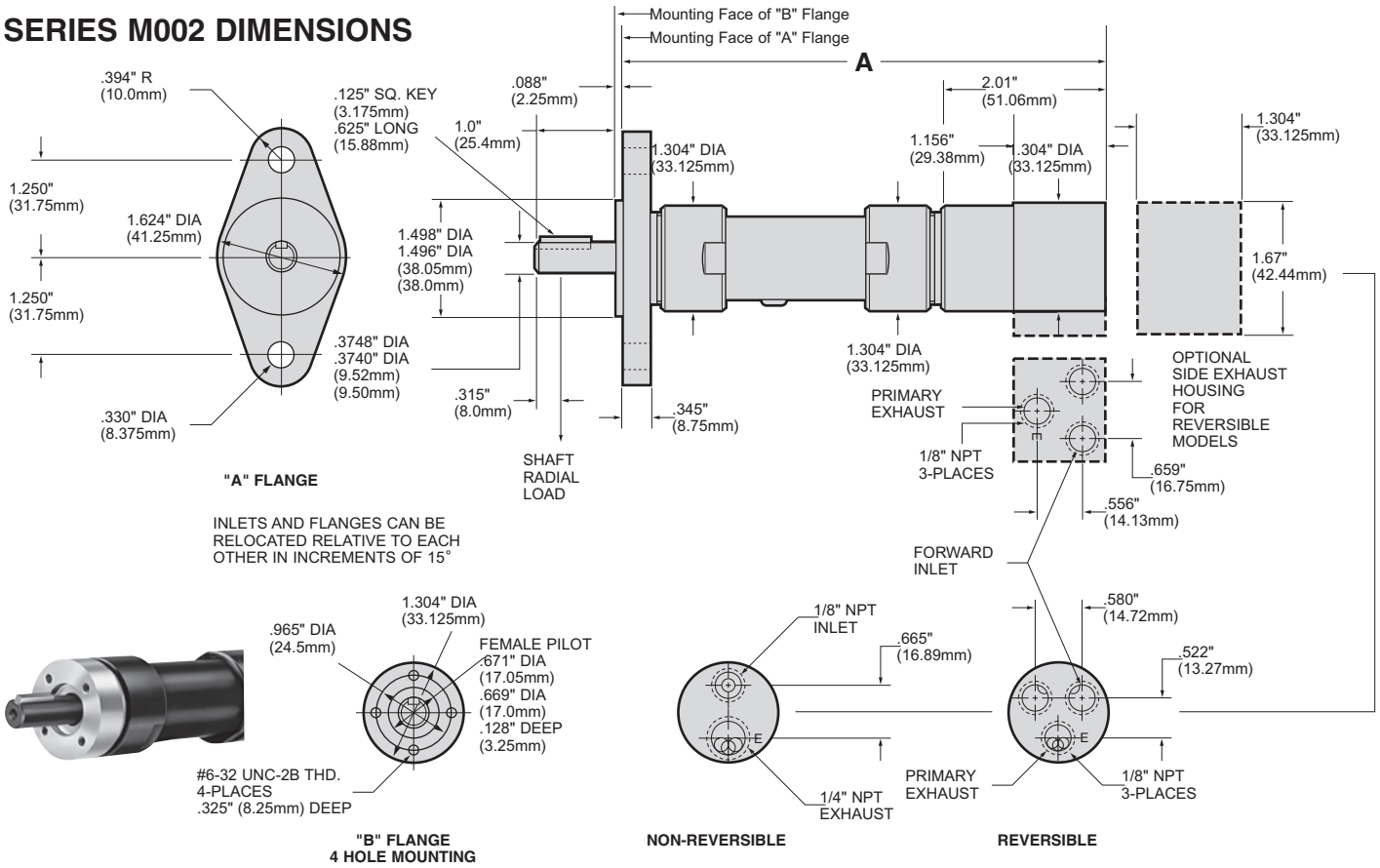

SERIES M002 MODEL NUMBER SYMBOLIZATION

M	002	RV	R	028	A	R3
Motor	HP	Rotation	Air Inlet & Exhaust	Gear Ratio	Flange	Shaft

HP = Approximate horsepower range (.11 to .25)

Rotation = RV Reversible
RH Non-Reversible, Right Hand from Rear of Motor (CCW facing shaft)
LH Non-Reversible, Left Hand from Rear of Motor (CW facing shaft)

Air Inlet & Exhaust = R Rear, S Side (Side Inlet and Exhaust available on Reversible Models only)

Gear Ratio = 028 is 1 to 28, 044 is 1 to 44, etc.

Flange = A 2 Hole Flange, B 4 Hole Face Mounting

Shaft = R3 ⅜" Round Keyed
T3 ⅜"-24 UNF-2A Threaded.
Threaded Shaft Extension is 1" (25.4mm) with Threaded Length from Shaft End of .87" (22mm).
Threaded Shaft Pilot at End is .315" (8mm) Dia. Max. by .374" (9.5mm) Long
S3 ⅜" Square Drive
Square Shaft Extension is 1.791" (45.5mm)

DIMENSIONS

Gear Ratios (Refer to Model No.)	A	
	in.	mm
000, 004, 008	4.989	126.73
006, 013, 021, 028, 044	5.510	139.93
101, 159	6.020	152.91

EQUIPMENT OPTIONS

Furnished with Cataloged Models	Standard Options	Extra Options
2 Hole Flange Mounting	4 Hole Face Mounting	R1440-212-1 ⅜" Square Drive Adapter, 1" long with ⅜" -24 Female threads for use with Threaded Shaft.
⅜" Round Keyed Shaft	⅜"-24 Threaded Shaft	
	Side Inlet and Exhaust Housing (for Reversible Models only)	Required for ⅜" Adapter (2) R2J-561 set screws (1) 8U-722 Bail

Note: On all Series M002, M004, and M007 Air Motors, performance is the same for both directions of rotation. On Non-Reversible models, direction of rotation may be easily changed without the need of additional parts by inverting cylinder.

000-Series Power Motors

SPECIFICATIONS

MODEL	SPINDLE	R.P.M. FREE SPEED	R.P.M. LOAD SPEED @MAX. H.P.	TORQUE STALL lb. ft.	TORQUE STALL Nm	TORQUE OUTPUT @MAX. H.P. lb. ft.	TORQUE OUTPUT @MAX. H.P. Nm	AIR CONSUMPTION @FREE SPEED SCFM	AIR CONSUMPTION @FREE SPEED L/s	SOUND LEVEL @FREE SPEED dB(A)	WEIGHT lbs.	WEIGHT kg.	GEAR REDUCTION
NON-REVERSIBLE - .25 H.P.													
7538-B	3/8" Keyed	550	325	8.2	11.1	4.0	5.4	18.1	8.5	75	1.82	.82	Double
7539-B	3/8" Keyed	900	550	5.0	6.7	2.4	3.2	18.1	8.5	75	1.82	.82	Double
7540-B	3/8" Keyed	2,700	1,600	1.75	2.3	.82	1.1	18.1	8.5	75	1.52	.68	Single
7541-B	3/8" Keyed	4,500	2,700	1.05	1.4	.49	.66	18.1	8.5	75	1.52	.68	Single
7542-C	3/8" Keyed	20,000	12,000	.22	.3	.11	.14	18.1	8.5	75	1.52	.68	Single
7533-B	3/8"-24 Th'd.	550	325	8.2	11.1	4.0	5.4	18.1	8.5	75	1.82	.82	Double
7534-B	3/8"-24 Th'd.	900	550	5.0	6.7	2.4	3.2	18.1	8.5	75	1.82	.82	Double
7535-C	3/8"-24 Th'd.	2,700	1,600	1.75	2.3	.82	1.1	18.1	8.5	75	1.52	.68	Single
7536-B	3/8"-24 Th'd.	4,500	2,700	1.05	1.4	.49	.66	18.1	8.5	75	1.52	.68	Single
7537-C	3/8"-24 Th'd.	20,000	12,000	.22	.3	11	14	18.1	8.5	75	1.52	.68	Single
REVERSIBLE - .25 H.P.													
7543-B	3/8" Keyed	550	300	7.80	10.6	4.37	5.9	20.0	9.4	75*	1.82	.82	Double
7544-B	3/8" Keyed	900	550	4.75	6.4	2.62	3.5	20.0	9.4	75*	1.82	.82	Double
7545-B	3/8" Keyed	2,700	1,500	1.60	2.2	.87	1.1	20.0	9.4	75*	1.52	.68	Single
7546-B	3/8" Keyed	4,500	2,400	.98	1.3	.55	.7	20.0	9.4	75*	1.52	.68	Single
7547-C	3/8" Keyed	20,000	11,000	.22	.3	.12	.16	20.0	9.4	75*	1.52	.68	Single

*Requires installation for reversible motors - shown on page 85.

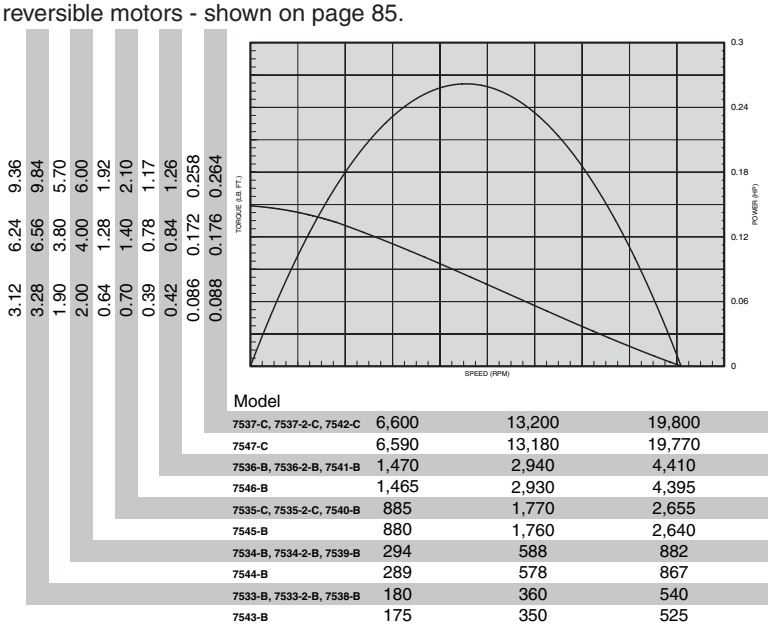

37898

37899

STANDARD EQUIPMENT

Steel motor housing, flush-type grease fittings at rotation points for gear and bearing lubrication, exhaust manifold and muffler.

EQUIPMENT OPTIONS

37898 Flange Bracket
37899 Foot Bracket

OPTIONS FOR MOTORS WITH THREAD SPINDLES

30384-5 3/8" (9.5 mm) Male Square-Drive Adapter.

30384-9 1/2" (12.7 mm) Male Square-Drive Adapter.

30712 1/4" (6.4 mm) Female Hex Ball-Lock Adapter for screwdriver bits.

47340 1/4" (6.4 mm) Capacity Drill Chuck.

42420 3/8" (9.5 mm) Arbor for rubber friction drive wheels up to 1" (25.4 mm) wide.

Dimensions – 000-Series Power Motors & Mounts

000-SERIES AND MOUNTING ACCESSORY DIMENSIONS

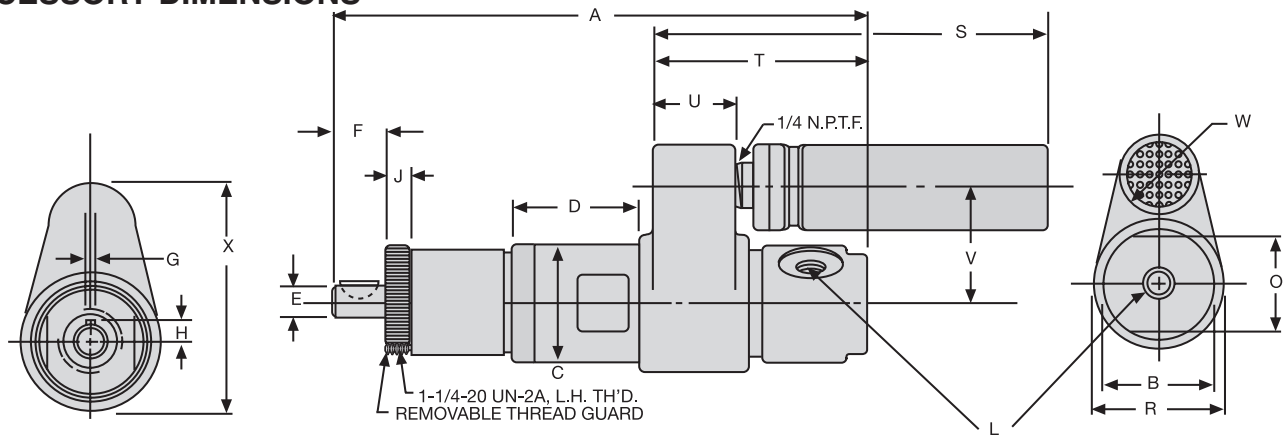

FORWARD ROTATION, DOUBLE REDUCTION SHOWN

Gear Reduction	DIMENSION A
Single	4-15/16 125 mm
Double	6 152 mm

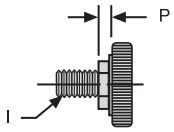

THREADED SPINDLE

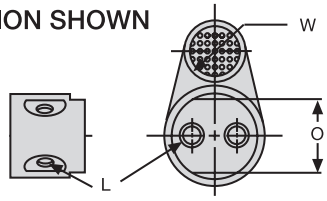

AIR INLETS, REVERSIBLE MOTORS

Scale	B	C	D	E	F	G	H	I	J	L
Inches	1-3/8	1.373 1.375	1-9/32	.3748 .3751	.592 .643	.0938 .0948	.228 .238	3/8"-24 UNF-3A Thread	.251 .276	1/8" NPTF Air Inlet
mm	35	34.87 34.93	32	9.52 9.53	15.04 16.33	2.38 2.41	5.79 6.05		6.38 7.01	

Scale	O	P	R	S	T	U	V	W	X
Inches	1-1/8 Rev. 1-3/16	.086 .139	1-5/8	4-9/16	2-15/32	31/32	1-3/8	1	2-11/16
mm	28 Rev. 30	2.18 3.53	41	116	63	25	35	25	68

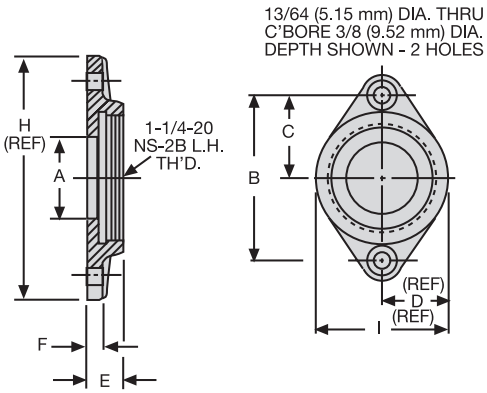

37898 FLANGE MOUNTING BRACKET

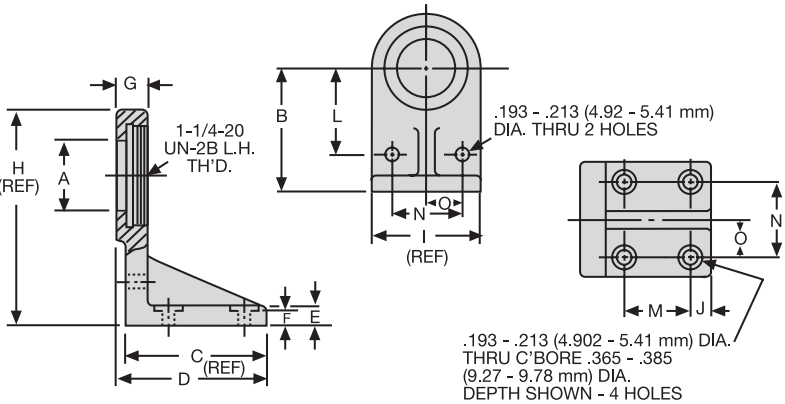

37899 FOOT MOUNTING BRACKET

Scale	A	B	C	D
Inches	.865 .885	2.042 2.082	1.021 1.041	13/16
mm	21.97 22.48	51.89 52.89	25.93 26.44	20.64

Scale	E	F	H	I
Inches	.380 .400	.177 .197	2-9/16	1-5/8
mm	9.65 10.16	4.50 5.00	65.09	41.28

Scale	A	B	C	D	E	F	G
Inches	.865 .885	1.865 1.885	1.740 1.760	1-7/8	7/32 9/32	.177 .197	.380 .400
mm	21.97 22.48	47.37 47.88	44.20 44.70	47.63	5.56 7.14	4.50 5.00	9.65 10.16

Scale	H	I	J	L	M	N	O
Inches	2-11/16	1-5/8	.271 .291	1.302 1.322	.927 .947	1.052 1.072	.521 .541
mm	68.26	41.27 41.28	6.88 7.39	33.07 33.56	23.55 24.05	26.27 27.23	13.23 13.74

Series M004 Multi-Vane Air Motors

SPECIFICATIONS

Model	Max. Power		Speed at Max. Power	Free Speed▲	Starting Torque		Stall Torque		Air Consumption at Max. Power		Weight	
	hp	kw	rpm	rpm	lb.-ft.	Nm	lb.-ft.	Nm	scfm	m³/m	lb.	kg
Non-Reversible Direction of rotation is counterclockwise when facing the shaft.												
M004RHR000AR3	0.50	0.37	10,000	18,000	0.40	0.54	0.53	0.72	20.0	0.57	2 1/16	0.95
M004RHR004AR3	0.47	0.35	2470	4450	1.46	1.98	1.94	2.63	19.5	0.55	2 3/16	1.00
M004RHR006AR3	0.47	0.35	1490	2680	2.42	3.28	3.22	4.37	19.5	0.55	2 3/16	1.00
M004RHR011AR3	0.44	0.33	825	1490	3.92	5.32	5.22	7.08	19.0	0.54	2 3/8	1.09
M004RHR015AR3	0.44	0.33	610	1095	5.32	7.21	7.10	9.63	19.0	0.54	2 3/8	1.09
M004RHR023AR3	0.44	0.33	395	715	8.10	11.0	10.8	14.6	19.0	0.54	2 3/8	1.09
M004RHR033AR3	0.44	0.33	280	505	11.5	15.6	15.4	20.8	19.0	0.54	2 3/8	1.09
M004RHR050AR3	0.41	0.31	175	315	*16.5	*22.4	*22.1	*30.0	18.5	0.52	2 11/16	1.22
M004RHR083AR3	0.41	0.31	106	190	*27.5	*37.3	*36.7	*49.7	18.5	0.52	2 11/16	1.22
M004RHR167AR3	0.41	0.31	53	95	*55.0	*74.5	*73.3	*99.4	18.5	0.52	2 11/16	1.22
Reversible												
M004RVR000AR3	0.40	0.30	8000	16,000	0.32	0.43	0.42	0.57	19.0	0.54	2 1/16	0.95
M004RVR004AR3	0.37	0.28	1975	3955	1.13	1.53	1.51	2.05	18.5	0.52	2 3/16	1.00
M004RVR006AR3	0.37	0.28	1190	2380	1.88	2.55	2.51	3.40	18.5	0.52	2 3/16	1.00
M004RVR011AR3	0.34	0.25	660	1325	3.00	4.07	4.00	5.42	18.0	0.51	2 3/8	1.09
M004RVR015AR3	0.34	0.25	485	975	4.07	5.52	5.43	7.36	18.0	0.51	2 3/8	1.09
M004RVR023AR3	0.34	0.25	315	635	6.23	8.45	8.30	11.2	18.0	0.51	2 3/8	1.09
M004RVR033AR3	0.34	0.25	225	450	8.85	12.0	11.8	16.0	18.0	0.51	2 3/8	1.09
M004RVR050AR3	0.31	0.23	140	280	*12.3	*16.7	*16.5	*22.4	17.5	0.50	2 11/16	1.22
M004RVR083AR3	0.31	0.23	84	169	*20.6	*27.9	*27.5	*37.3	17.5	0.50	2 11/16	1.22
M004RVR167AR3	0.31	0.23	42	85	*41.3	*56.0	*55.0	*74.5	17.5	0.50	2 11/16	1.22

▲ ALL models must be operated with sufficient load to prevent speed from exceeding maximum allowable speed shown on performance curve.
* Applications with these models must be limited to 33 lb.-ft. (44.7 Nm) torque.
Performance figures are at 90 psig (620 kPa) air pressure.

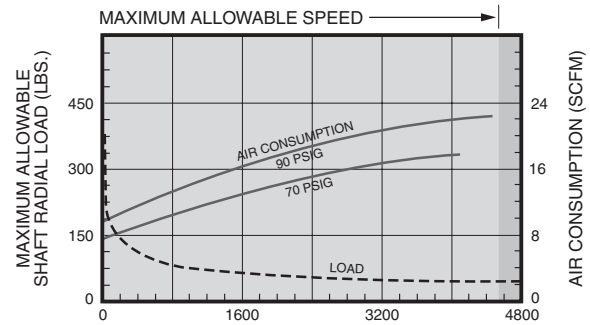

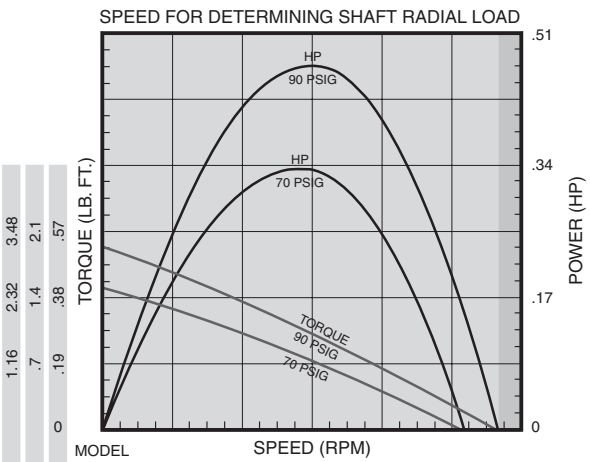

MODEL			
M004RHR000AR3	6470	12940	19410
M004RHR004AR3	1600	3200	4800
M004RHR006AR3	964	1928	2892

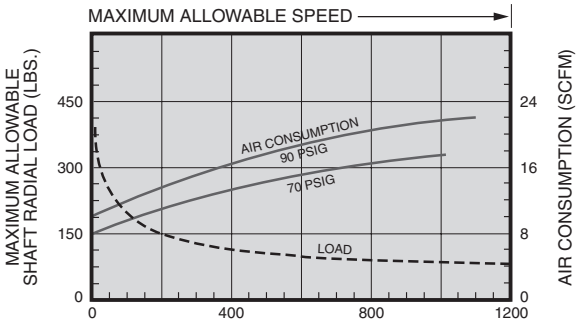

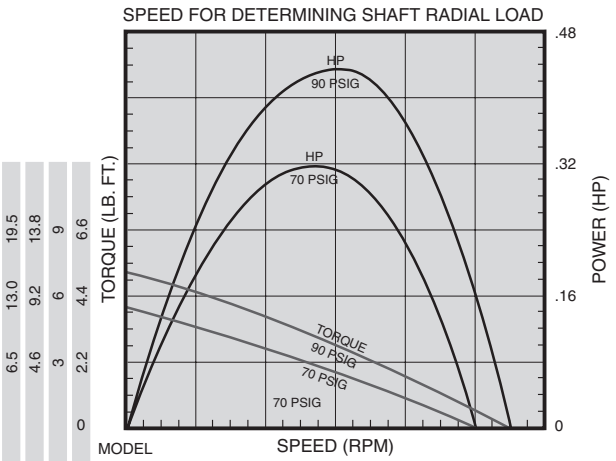

MODEL			
M004RHR011AR3	542	1084	1626
M004RHR015AR3	400	800	1200
M004RHR023AR3	262	524	786
M004RHR033AR3	184	368	552

Series M004 Multi-Vane Air Motors

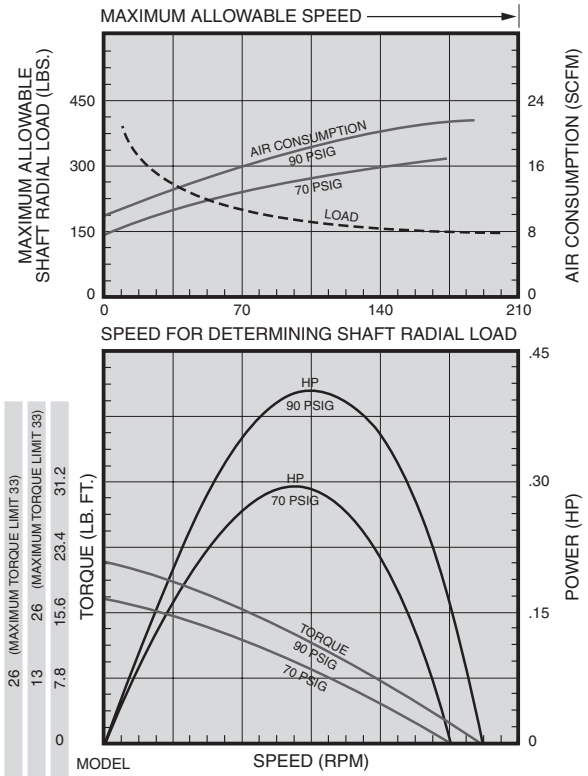

MODEL			
M004RHR050AR3	116	232	348
M004RHR083AR3	70	140	210
M004RHR167AR3	35	70	105

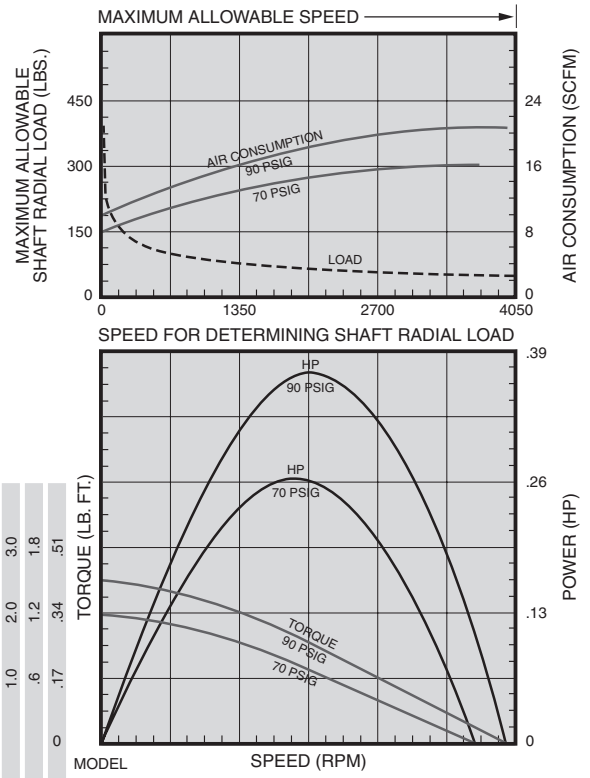

MODEL			
M004RVR000AR3	5460	10920	16380
M004RVR004AR3	1350	2700	4050
M004RVR006AR3	813	1626	2439

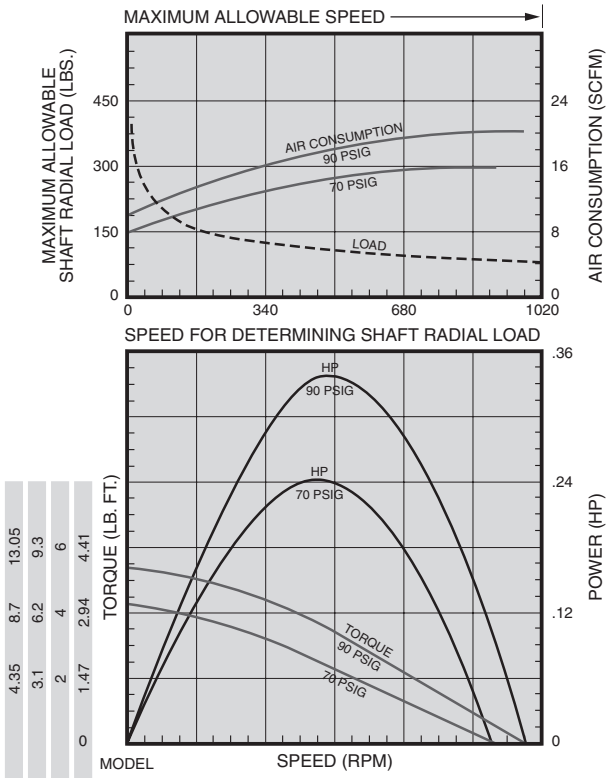

MODEL			
M004RVR011AR3	460	920	1380
M004RVR015AR3	340	680	1020
M004RVR023AR3	222	444	666
M004RVR033AR3	156	312	468

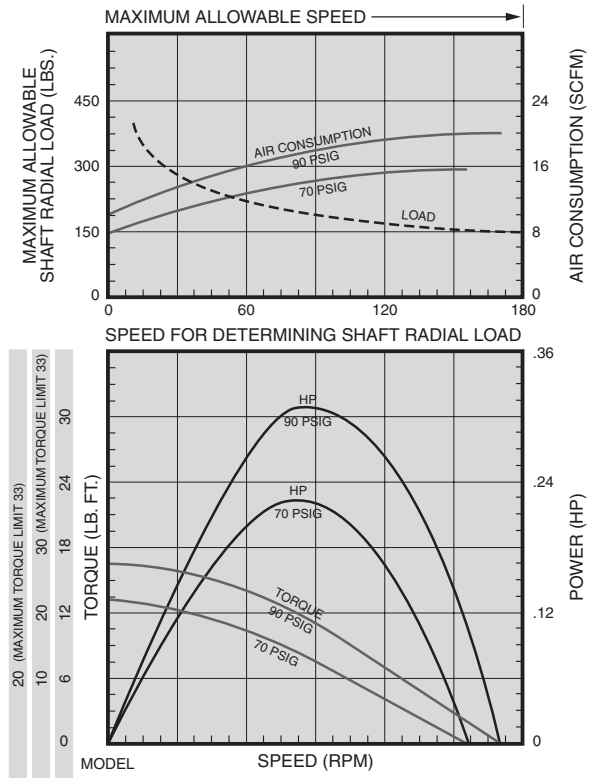

MODEL			
M004RVR050AR3	100	200	300
M004RVR083AR3	60	120	180
M004RVR167AR3	30	60	90

Series M004 Multi-Vane Air Motors

SERIES M004 DIMENSIONS

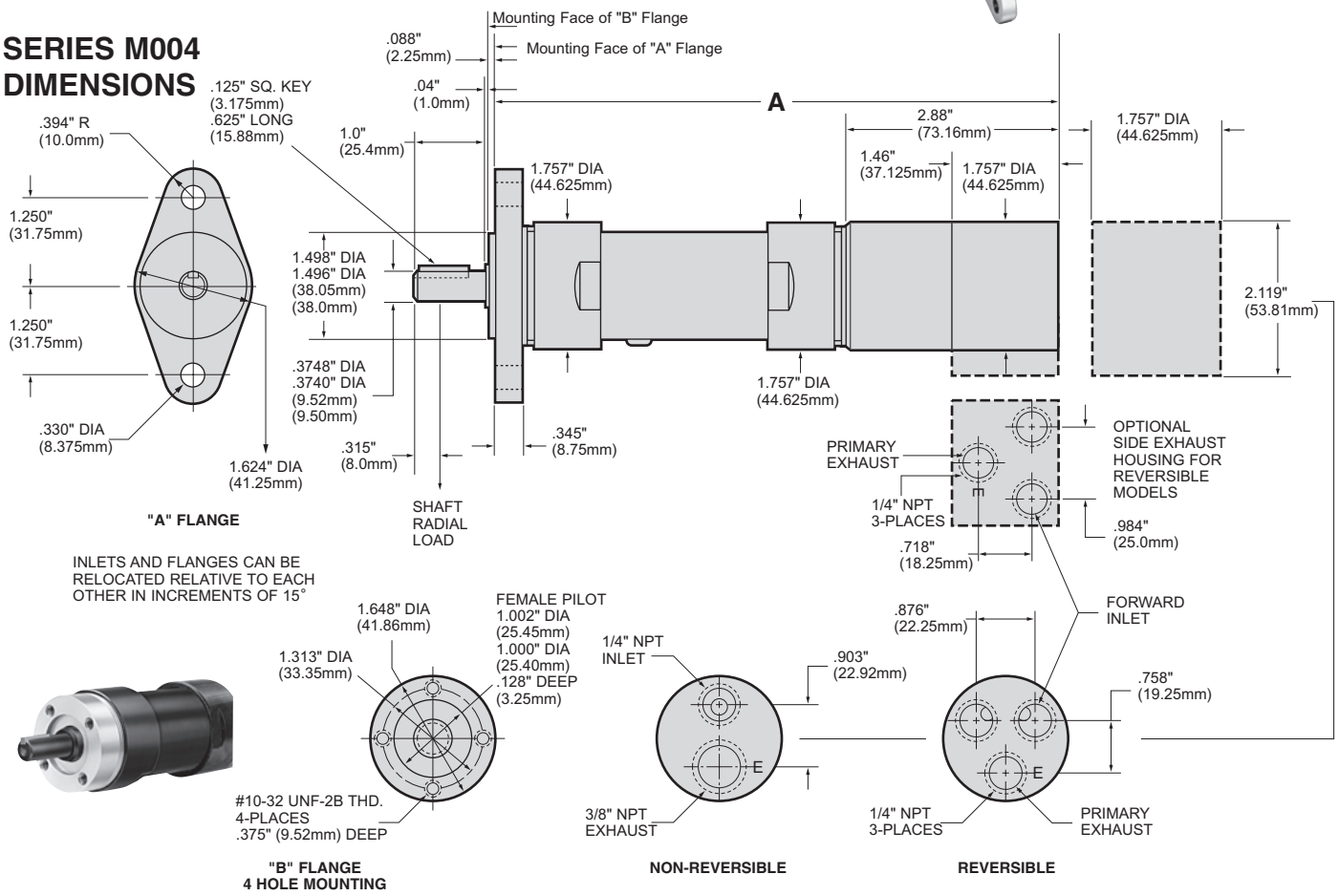

SERIES M004 MODEL NUMBER SYMBOLIZATION

M	004	RV	R	023	A	R3
Motor	HP	Rotation	Air Inlet & Exhaust	Gear Ratio	Flange	Shaft

HP = Approximate horsepower range (.31 to .50)

Rotation = RV Reversible
RH Non-Reversible, Right Hand from Rear of Motor (CCW facing shaft)
LH Non-Reversible, Left Hand from Rear of Motor (CW facing shaft)

Air Inlet & Exhaust = R Rear, S Side (Side Inlet and Exhaust available on Reversible Models only)

Gear Ratio = 023 is 1 to 23, 033 is 1 to 33, etc.

Flange = A 2 Hole Flange, B 4 Hole Face Mounting

Shaft = R3 ⅜" Round Keyed
T3 ⅜"-24 UNF-2A Threaded
Threaded Shaft Extension is .512" (13mm)
Full Thread Length is .424" (10.75mm)
S3 ⅜" Square Drive
Square Shaft Extension is 1.791" (45.5mm)

DIMENSIONS

Gear Ratios (Refer to Model No.)	A	
	in.	mm
000, 004, 006	6.248	158.69
011, 015, 023, 033	6.984	177.38
050, 083, 167	7.745	196.73

EQUIPMENT OPTIONS

Furnished with Cataloged Models	Standard Options	Extra Options
2 Hole Flange Mounting	4 Hole Face Mounting	R1440-212-1 ⅜" Square Drive Adapter, 1" long with ⅜" -24 Female threads for use with Threaded Shaft.
⅜" Round Keyed Shaft	⅜"-24 Threaded Shaft	
	Side Inlet and Exhaust Housing (for Reversible Models only)	Required for ⅜" Adapter (2) R2J-561 set screws

Note: On all Series M002, M004, and M007 Air Motors, performance is the same for both directions of rotation. On Non-Reversible models, direction of rotation may be easily changed without the need of additional parts by inverting cylinder. See Assembly Instruction form number listed in price sheet.

0-Series Power Motors with 0-Series Gearing

SPECIFICATIONS

MODEL	SPINDLE	R.P.M. FREE SPEED	R.P.M. LOAD SPEED @MAX. H.P.	TORQUE STALL lb. ft.	TORQUE STALL Nm	TORQUE OUTPUT @MAX. H.P. lb. ft.	TORQUE OUTPUT @MAX. H.P. Nm	AIR CONSUMPTION @FREE SPEED SCFM	AIR CONSUMPTION @FREE SPEED L/s	SOUND LEVEL @FREE SPEED dB(A)	WEIGHT lbs.	WEIGHT kg.	GEAR REDUCTION
NON-REVERSIBLE - .60 H.P.													
8230-1A	3/8" Keyed	19,000	9,800	.70	.9	.32	.4	41	19.3	80	2.45	1.10	Single
8230-2A	3/8" Keyed	5,700	2,900	2.5	2.9	1.10	1.5	41	19.3	80	2.45	1.10	Single
8230-3A	3/8" Keyed	3,500	1,750	3.50	4.7	1.80	2.4	41	19.3	80	2.45	1.10	Single
8230-4A	3/8" Keyed	2,800	1,400	4.50	6.1	2.20	3.0	41	19.3	80	2.45	1.10	Single
8230-5A	3/8" Keyed	1,650	840	7.50	10.2	3.80	5.1	41	19.3	80	2.98	1.34	Double
8230-6A	3/8" Keyed	1,000	500	12.00	16.3	6.20	8.4	41	19.3	80	2.98	1.34	Double
8230-7A	3/8" Keyed	800	390	14.80	20.0	8.00	10.8	41	19.3	80	2.98	1.34	Double
8230-8A	3/8" Keyed	600	315	19.60	26.5	10.00	13.5	41	19.3	80	2.98	1.34	Double
8230-9A	3/8" Keyed	500	250	24.00	32.5	12.50	16.9	41	19.3	80	2.98	1.34	Double
8229-1A	3/8"-24 Th'd.	19,000	9,800	.70	.9	.32	.4	41	19.3	80	2.45	1.10	Single
8229-2A	3/8"-24 Th'd.	5,700	2,900	2.15	2.9	1.10	1.5	41	19.3	80	2.45	1.10	Single
8229-3A	3/8"-24 Th'd.	3,500	1,750	3.50	4.7	1.80	2.4	41	19.3	80	2.45	1.10	Single
8229-4A	3/8"-24 Th'd.	2,800	1,400	4.50	6.1	2.20	3.0	41	19.3	80	2.45	1.10	Single
8229-5A	3/8"-24 Th'd.	1,650	840	7.50	10.2	3.80	5.1	41	19.3	80	2.98	1.34	Double
8229-6A	3/8"-24 Th'd.	1,000	500	12.00	16.3	6.20	8.4	41	19.3	80	2.98	1.34	Double
8229-7A	3/8"-24 Th'd.	800	390	14.80	20.0	8.00	10.8	41	19.3	80	2.98	1.34	Double
8229-8A	3/8"-24 Th'd.	600	315	19.60	26.5	10.00	13.5	41	19.3	80	2.98	1.34	Double
8229-9A	3/8"-24 Th'd.	500	250	24.00	32.5	12.50	16.9	41	19.3	80	2.98	1.34	Double
REVERSIBLE - .50 H.P.													
8231-1B	3/8" Keyed	18,000	9,200	.52	.7	.28	.4	32	15.1	80*	2.45	1.10	Single
8231-2B	3/8" Keyed	5,300	2,600	1.70	2.3	1.00	1.3	32	15.1	80*	2.45	1.10	Single
8231-3B	3/8" Keyed	3,200	1,550	2.90	3.9	1.70	2.3	32	15.1	80*	2.45	1.10	Single
8231-4B	3/8" Keyed	2,600	1,300	3.50	4.7	2.00	2.7	32	15.1	80*	2.45	1.10	Single
8231-5B	3/8" Keyed	1,500	780	5.90	8.0	3.50	4.7	32	15.1	80*	2.98	1.34	Double
8231-6B	3/8" Keyed	950	480	9.50	12.9	5.50	7.4	32	15.1	80*	2.98	1.34	Double
8231-7B	3/8" Keyed	750	380	11.80	16.0	7.00	9.5	32	15.1	80*	2.98	1.34	Double
8231-8B	3/8" Keyed	575	290	15.50	21.0	9.00	12.2	32	15.1	80*	2.98	1.34	Double
8231-9B	3/8" Keyed	475	240	19.40	26.2	11.00	14.9	32	15.1	80*	2.98	1.34	Double

*Requires installation for reversible motors - shown on page 85.

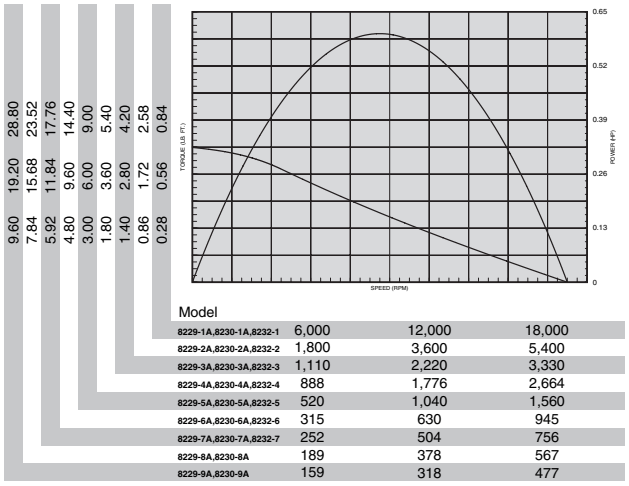

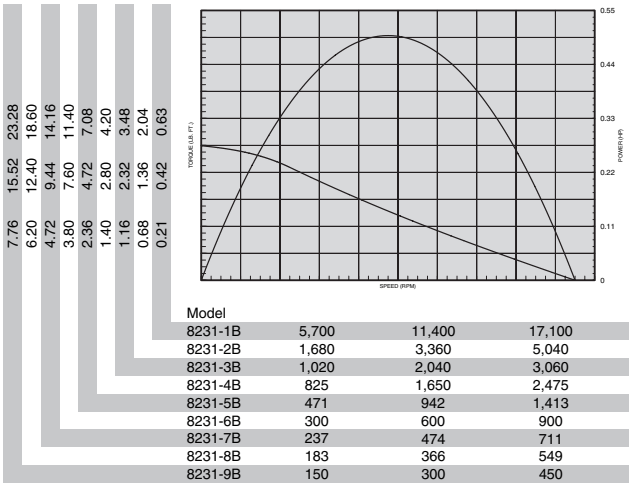

STANDARD EQUIPMENT

Steel motor housing, flush-type grease fittings at rotation points for gear and bearing lubrication, exhaust manifold rotatable within 360°, and muffler.

EQUIPMENT OPTIONS

37896 Flange Bracket
37897 Foot Bracket

OPTIONS FOR MOTORS WITH THREADED SPINDLES

30384-5 3/8" (9.5 mm) Male Square-Drive Adapter.
30384-9 1/2" (12.7 mm) Male Square-Drive Adapter.
30712 1/4" (6.4 mm) Female Hex Ball-Lock Adapter for screwdriver bits.
47341 5/16" (7.9 mm) Capacity Drill Chuck.
42420 3/8" (9.5 mm) Arbor for rubber friction drive wheels up to 1" (25.4 mm) wide.

0-SERIES AND MOUNTING ACCESSORY DIMENSIONS

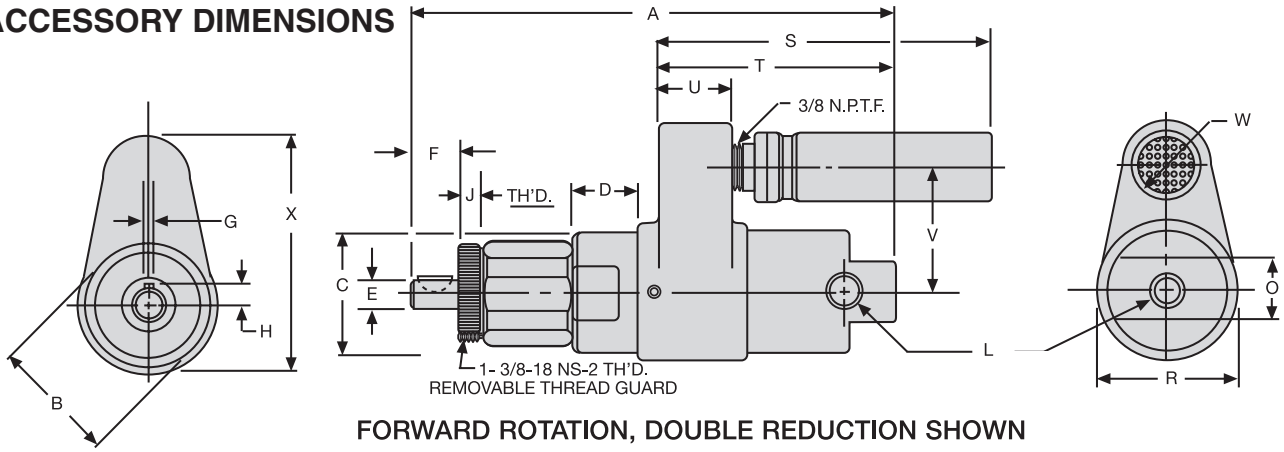

FORWARD ROTATION, DOUBLE REDUCTION SHOWN

DIMENSION A		
Gear Reduction	Series 8231	Series 8229-8230
Single	5-5/8 143 mm	5-3/4 146 mm
Double	6-15/16 176 mm	7-1/16 179 mm

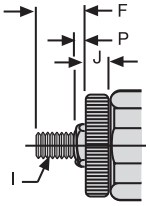

THREADED SPINDLE

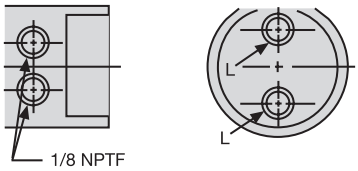

AIR INLETS, REVERSIBLE MOTORS

Scale	B	C	D	E	F	G	H	I	J	L
Inches	1-3/4	1.730 1.740	.960 .980	.3748 .3751	.688 .740	.0938 .0948	.228 .238	3/8"-24 UNF-3A	.270 .292	1/4" Female NPTF
mm	44	43.94 44.20	24.38 24.89	9.52 9.53	17.48 18.80	2.38 2.41	5.79 6.05	Thread	6.86 7.42	Air Inlet

Scale	O	P	R	S	T - Forw.	T	U	V	W	X
Inches	7/8	.163-.203	2	4-7/8	3-13/32	3-9/32	1-1/16	1-13/16	1	3-7/16
mm	22	4.14 5.16	51	124	86	83	27	46	25	87

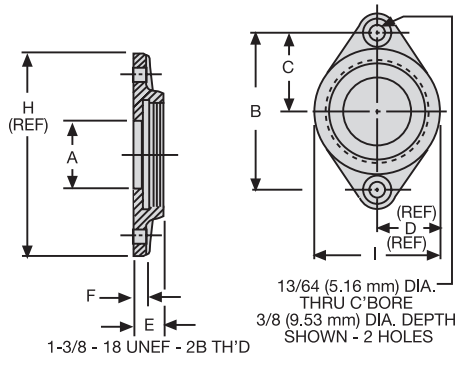

37896 FLANGE MOUNTING BRACKET

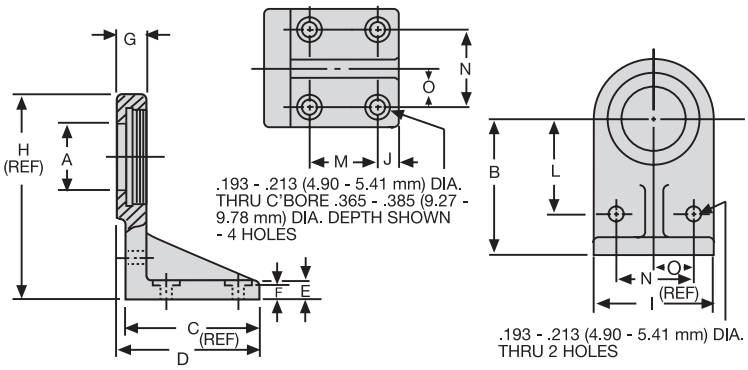

37897 FOOT MOUNTING BRACKET

Scale	A	B	C	D
Inches	.865 .885	2.042 2.082	1.021 1.041	13/16
mm	21.97 22.48	51.89 52.88	25.93 26.44	20.64

Scale	E	F	H	I
Inches	.380 .400	.177 .197	2-9/16	1-5/8
mm	9.65 10.16	4.50 5.00	65.09	41.28

Scale	A	B	C	D	E	F	G
Inches	.865 .885	1.865 1.885	1.740 1.760	1-7/8	7/32 9/32	.177 .197	.380 .400
mm	21.97 22.48	47.37 47.88	44.20 44.70	47.63	5.56 7.14	4.50 5.00	9.65 10.16

Scale	H	I	J	L	M	N	O
Inches	2-11/16	1-5/8	.271 .291	1.302 1.322	.927 .947	1.052 1.072	.521 .541
mm	68.26	41.27	6.88 7.39	33.07 33.58	23.55 24.05	26.27 27.23	13.23 13.74

0-Series Power Motors with 2200 Series Gearing

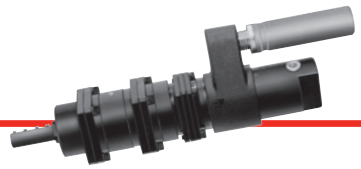

SPECIFICATIONS

MODEL	SPINDLE	R.P.M. FREE SPEED	R.P.M. LOAD SPEED @MAX H P	TORQUE STALL lb ft	TORQUE STALL Nm	TORQUE OUTPUT @MAX. H.P. lb. ft.	TORQUE OUTPUT @MAX. H.P. Nm	AIR CONSUMPTION @FREE SPEED SCFM	AIR CONSUMPTION @FREE SPEED L/s	SOUND LEVEL @FREE SPEED dB(A)	WEIGHT lbs	WEIGHT kg	GEAR REDUCTION
NON-REVERSIBLE - .60 H.P.													
8226-6A	1/2" Keyed	700	350	17.20	23.3	9.00	12.2	40.5	19.1	80	4.25	1.91	Double
8226-7A	1/2" Keyed	450	225	26.00	35.2	13.70	18.6	40.5	19.1	80	4.25	1.91	Double
8226-8A	1/2" Keyed	375	185	32.00	43.4	17.00	23.0	40.5	19.1	80	4.25	1.91	Double
8226-10A	1/2" Keyed	170	87	**60.00	88.1	36.00	48.8	40.5	19.1	80	5.56	2.50	Triple
8226-11A**	1/2" Keyed	110	57	**60.00	134.1	55.00	74.5	40.5	19.1	80	5.56	2.50	Triple
8226-12A**	1/2" Keyed	90	45	**60.00	165.3	**60.00	94.8	40.5	19.1	80	5.56	2.50	Triple
8226-13A**	1/2" Keyed	60	30	**60.00	249.3	**60.00	139.6	40.5	19.1	80	5.56	2.50	Triple
8226-14A**	1/2" Keyed	50	25	**60.00	306.2	**60.00	169.4	40.5	19.1	80	5.56	2.50	Triple
REVERSIBLE - .50 H.P.													
8228-2B	1/2" Keyed	3,200	1,550	2.90	3.9	1.70	2.3	30	14	80*	4.25	1.91	Double
8228-3B	1/2" Keyed	2,600	1,300	3.50	4.7	2.00	2.7	30	14	80*	4.25	1.91	Double
8228-5B	1/2" Keyed	800	420	11.20	15.2	6.30	8.5	30	14	80*	4.25	1.91	Double
8228-6B	1/2" Keyed	650	330	13.80	18.7	8.00	10.8	30	14	80*	4.25	1.91	Double
8228-7B	1/2" Keyed	425	220	20.00	27.1	12.00	16.3	30	14	80*	4.25	1.91	Double
8228-8B	1/2" Keyed	350	185	25.00	33.9	14.00	19.0	30	14	80*	4.25	1.91	Double
8228-9B	1/2" Keyed	200	105	45.00	61.0	25.00	33.9	30	14	80*	5.56	2.50	Triple
8228-10B	1/2" Keyed	160	80	55.00	74.5	33.00	44.7	30	14	80*	5.56	2.50	Triple
8228-11B**	1/2" Keyed	100	54	**60.00	81.3	48.00	65.0	30	14	80*	5.56	2.50	Triple
8228-12B**	1/2" Keyed	85	43	**60.00	81.3	**60.00	81.3	30	14	80*	5.56	2.50	Triple
8228-13B**	1/2" Keyed	50	28	**60.00	81.3	**60.00	81.3	30	14	80*	5.56	2.50	Triple
8228-14B**	1/2" Keyed	40	22	**60.00	81.3	**60.00	81.3	30	14	80*	5.56	2.50	Triple

*Requires installation for reversible motors - shown on page 85.

**NOTE: Maximum torque recommended for planetary gear system on these models requires shear key with 60 ft./lbs. shear strength.

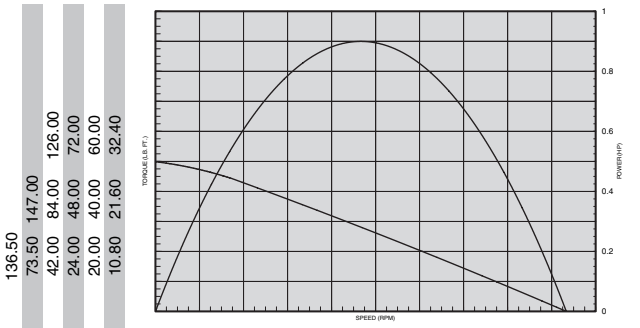

Model			
8276-1A	225	450	675
8276-2A	112	224	336
8276-3A	97	194	291
8276-4A	52	104	156
8276-5A*	32	64	96
8276-6A*	16	32	48

*NOTE: Maximum torque recommended for planetary gear system on these models requires shear key with 150 ft./lbs. shear strength.

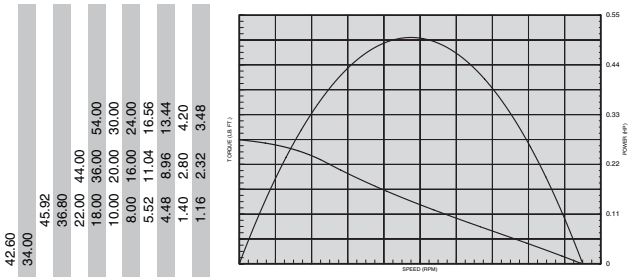

Model			
8228-2B	1,020	2,040	3,060
8228-3B	825	1,650	2,475
8228-5B	255	510	765
8228-6B	204	408	612
8228-7B	135	270	405
8228-8B	111	222	333
8228-9B	63	126	189
8228-10B	51	102	153
8228-11B*	32	64	96
8228-12B*	27	54	81
8228-13B*	16	32	48
8228-14B*	13	26	39

*NOTE: Maximum torque recommended for planetary gear system on these models requires shear key with 60 ft./lbs. shear strength.

STANDARD EQUIPMENT

Steel motor housing, flush-type grease fittings at rotation points for gear and bearing lubrication, exhaust manifold rotatable within 360°, and muffler.

EQUIPMENT OPTIONS

37895-1 Flange Bracket
Provision for flange mounting is standard on all models.

NO-COST OPTIONS FURNISHED WHEN SPECIFIED ON ORIGINAL ORDER

1/2" - 20 Male Threaded Spindle on forward-rotation models.

37895-1

0/2200-SERIES AND MOUNTING ACCESSORY DIMENSIONS

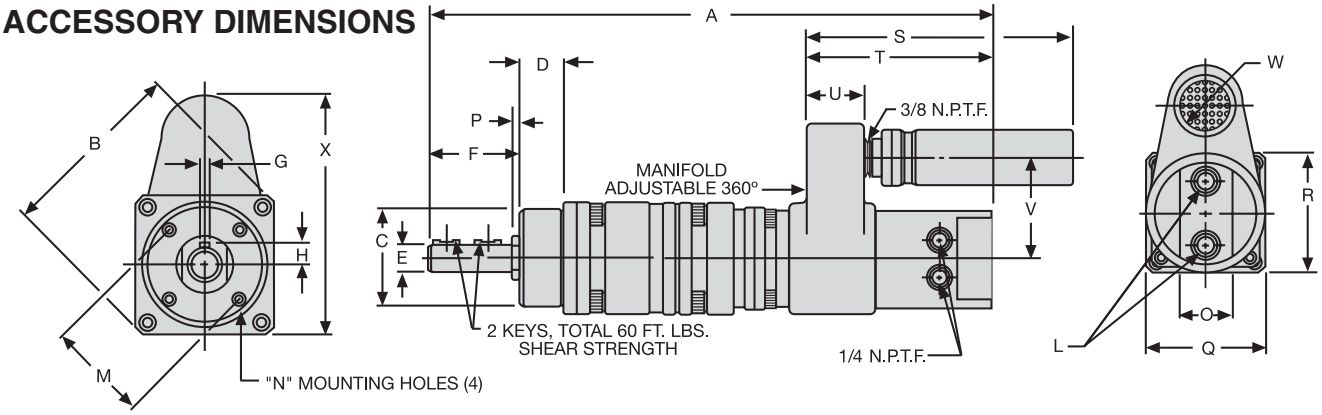

REVERSIBLE ROTATION, TRIPLE REDUCTION SHOWN

DIMENSION A		
Gear Reduction	Series 8226	Series 8228
Double	8-11/16 221 mm	8-9/16 217 mm
Triple	10-1/2 267 mm	10-3/8 264 mm

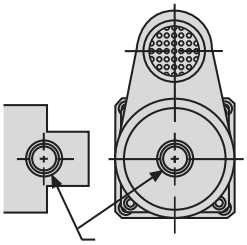

AIR INLETS, SINGLE-DIRECTION MOTORS

Scale	B	C	D	E	F	G	H	L	M	N
Inches	2-11/16	1.7490 1.7495	.774 .818	.4990 .4995	1.604 1.655	.125 .126	.299 .309	1/4 NPTF	1.432 1.442	10-24 UNC-2B
mm	68	44.42 44.44	19.66 20.78	12.67 12.69	40.74 42.04	3.18 3.20	7.72 7.98	Air Inlet	36.37 36.63	Thread

Scale	O	P	Q	R	S	T - Forward Rotation	T Reversible	U	V	W	X
Inches	7/8	.098 .164	2	2	4-7/8	3-13/32	3-9/32	1-1/16	1-13/16	1	3-7/16
mm	22	2.49 4.17	51	51	124	86	83	27	46	25	87

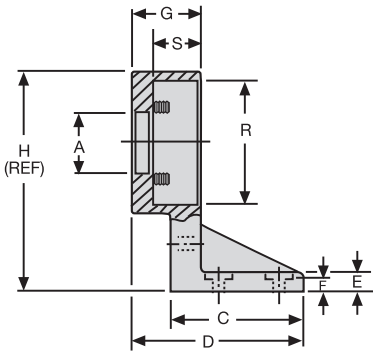

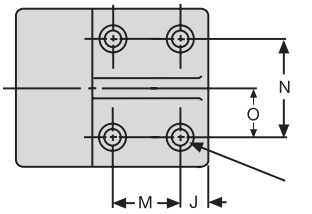

.193 - .213 (4.90 - 5.41 mm) DIA. THRU
C'BORE .365 - .385 (9.27 - 9.78 mm) DIA.
DEPTH SHOWN - 4 HOLES

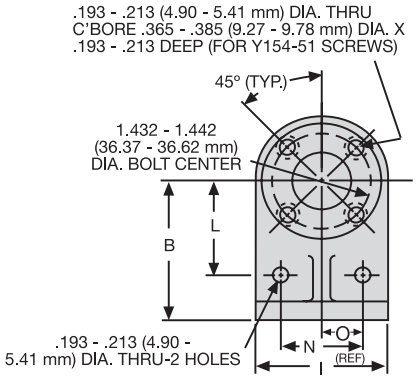

37895-1 FOOT MOUNTING BRACKET

Scale	A	B	C	D	E	F	G	H
Inches	.865 .886	2.115 2.135	1.843 1.875	2.421 2.453	.281 .343	.177 .197	.958 .978	3-1/8
mm	21.97 22.48	53.72 54.23	46.81 47.63	61.49 62.31	7.14 8.71	4.50 5.00	24.33 24.84	79.38

Scale	I	J	L	M	N	O	R	S
Inches	2	.333 .353	1.427 1.447	.833 .853	1.240 1.260	.615 .635	1.750 1.751	.640 .687
mm	50.80	8.46 8.97	36.25 36.75	21.16 21.67	31.50 32.00	15.62 16.13	44.45 44.48	16.26 17.45

Series M007 Multi-Vane Air Motors

SPECIFICATIONS

Model	Max. Power		Speed at Max. Power	Free Speed▲	Starting Torque		Stall Torque		Air Consumption at Max. Power		Weight	
	hp	kw	rpm	rpm	lb.-ft.	Nm	lb.-ft.	Nm	scfm	m^3/m	lb.	kg
Non-Reversible Direction of rotation is counterclockwise when facing the shaft.												
M007RHR000AR4	0.85	0.63	11,000	22,000	0.58	0.79	0.77	1.04	36	1.02	3 1/16	1.4
M007RHR004AR4	0.82	0.61	2445	4890	2.39	3.24	3.19	4.33	36	1.02	3 1/16	1.4
M007RHR006AR4	0.82	0.61	1675	3350	3.50	4.75	4.66	6.32	36	1.02	3 1/16	1.4
M007RHR009AR4	0.82	0.61	1230	2460	4.76	6.45	6.34	8.60	36	1.02	3 1/16	1.4
M007RHR012AR4	0.79	0.59	870	1740	6.19	6.39	8.25	11.2	36	1.02	3 1/2	1.6
M007RHR015AR4	0.79	0.59	685	1370	7.80	10.6	10.4	14.1	36	1.02	3 1/2	1.6
M007RHR021AR4	0.79	0.59	470	940	11.5	15.6	15.3	20.7	36	1.02	3 1/2	1.6
M007RHR027AR4	0.79	0.59	370	740	14.5	19.7	19.3	26.2	36	1.02	3 1/2	1.6
M007RHR037AR4	0.79	0.59	270	540	19.7	26.7	26.3	35.7	36	1.02	3 1/2	1.6
M007RHR044AR4	0.79	0.59	232	465	23.2	31.5	30.9	41.9	36	1.02	3 1/2	1.6
M007RHR063BR6	0.79	0.59	161	321	33.5	45.4	44.7	60.6	36	1.02	7 1/8	3.2
M007RHR086BR6	0.79	0.59	118	236	45.7	62.0	60.9	82.6	36	1.02	7 1/8	3.2
M007RHR119BR6	0.76	0.57	82	163	60.5	82.0	80.7	109.0	36	1.02	7 3/8	3.4
M007RHR151BR6	0.76	0.57	65	129	76.5	104.0	102.0	138.0	36	1.02	7 3/8	3.4
M007RHR188BR6	0.76	0.57	52	103	96.0	130.0	128.0	174.0	36	1.02	7 3/8	3.4
M007RHR275BR6	0.76	0.57	35	70	*140.0	*190.0	*187.0	*254.0	36	1.02	7 3/8	3.4
M007RHR374BR6	0.76	0 57	26	52	*191.0	*259.0	*254.0	*344.0	36	1.02	7 3/8	3.4
Reversible												
M007RVR000AR4	0.70	0.52	10,000	20,000	0.47	0.64	0.63	0.85	33	0.93	3 1/16	1.4
M007RVR004AR4	0.67	0.50	2225	4450	1.94	2.63	2.59	3.51	33	0.93	3 1/16	1.4
M007RVR006AR4	0.67	0.50	1520	3045	2.84	3.85	3.78	5.13	33	0.93	3 1/16	1.4
M007RVR009AR4	0.67	0.50	1120	2240	3.86	5.23	5.14	6.97	33	0.93	3 1/16	1.4
M007RVR012AR4	0.64	0.48	790	1580	4.97	6.74	6.63	8.99	33	0.93	3 1/2	1.6
M007RVR015AR4	0.64	0.48	625	1250	6.29	8.53	8.38	11.4	33	0.93	3 1/2	1.6
M007RVR021AR4	0.64	0.48	425	855	9.2	12.5	12.2	16.5	33	0.93	3 1/2	1.6
M007RVR027AR4	0.64	0.48	335	675	11.6	15.7	15.5	20.1	33	0.93	3 1/2	1.6
M007RVR037AR4	0.64	0.48	245	495	15.8	21.4	21.1	28.6	33	0.93	3 1/2	1.6
M007RVR044AR4	0.64	0.48	210	420	18.6	25.2	24.8	33.6	33	0.93	3 1/2	1.6
M007RVR063BR6	0.64	0.48	146	292	26.9	36.5	35.9	48.7	33	0.93	7 1/8	3.2
M007RVR086BR6	0.64	0.48	107	215	36.7	49.8	48.9	66.3	33	0.93	7 1/8	3.2
M007RVR119BR6	0.61	0.46	74	148	48.1	65.3	64.1	87.0	33	0.93	7 3/8	3.4
M007RVR151BR6	0.61	0.46	58	117	61.0	82.7	81.3	110.0	33	0.93	7 3/8	3.4
M007RVR188BR6	0.61	0.46	47	94	76.5	104.0	102.0	138.0	33	0.93	7 3/8	3.4
M007RVR275BR6	0.61	0.46	32	64	*111.0	*151.0	*148.0	*201.0	33	0.93	7 3/8	3.4
M007RVR374BR6	0.61	0.46	23	47	*152.0	*206.0	*202.0	*274.0	33	0.93	7 3/8	3.4

▲ ALL models must be operated with sufficient load to prevent speed from exceeding maximum allowable speed shown on performance curve.
* Applications with these models must be limited to 224 lb.-ft. (304 Nm) torque.
Performance figures are at 90 psig (620 kPa) air pressure.

Note: On all Series M002, M004, and M007 Air Motors, performance is the same for both directions of rotation. On Non-Reversible models, direction of rotation may be easily changed without the need of additional parts by inverting cylinder. See Assembly Instruction form number listed in price sheet.

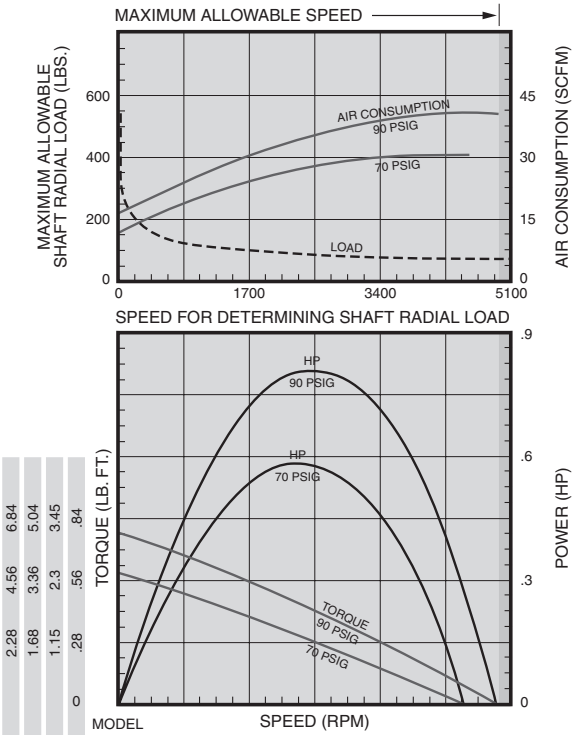

MODEL	SPEED (RPM)		
M007RHR000AR4	7635	15270	22905
M007RHR004AR4	1700	3400	5100
M007RHR006AR4	1164	2328	3492
M007RHR009AR4	855	1710	2565

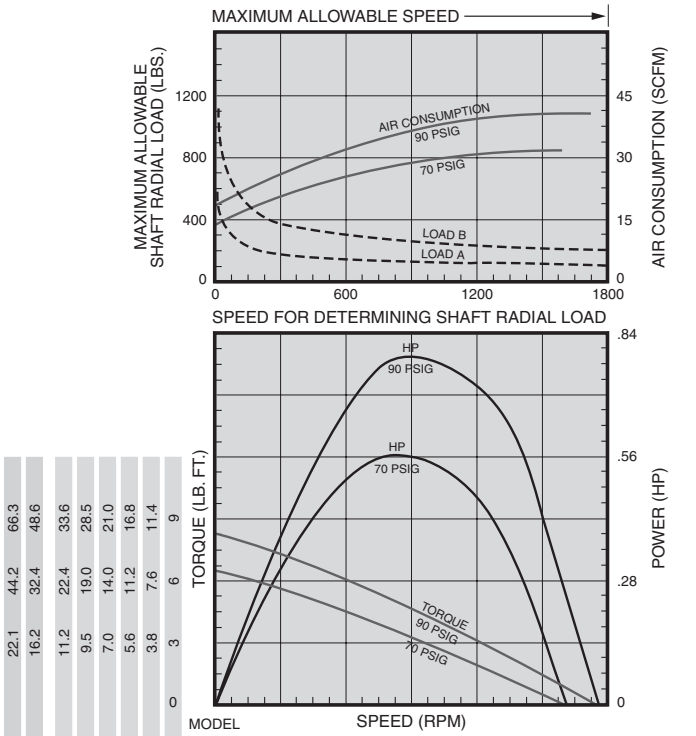

MODEL	SPEED (RPM)			
M007RHR012AR4	600	1200	1800	
M007RHR015AR4	474	948	1422	
M007RHR021AR4	325	650	975	LOAD CURVE A
M007RHR027AR4	256	512	768	
M007RHR037AR4	188	376	564	
M007RHR044AR4	160	320	480	
M007RHR063BR6	110	220	330	LOAD CURVE B
M007RHR086BR6	81	162	243	

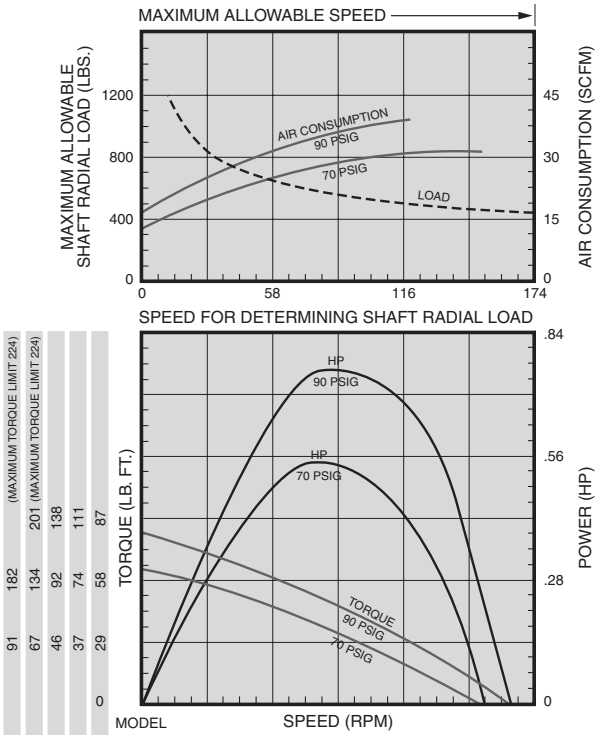

MODEL	SPEED (RPM)		
M007RHR119BR6	58	116	174
M007RHR151BR6	46	92	138
M007RHR188BR6	37	74	111
M007RHR275BR6	25	50	75
M007RHR374BR6	18	36	54

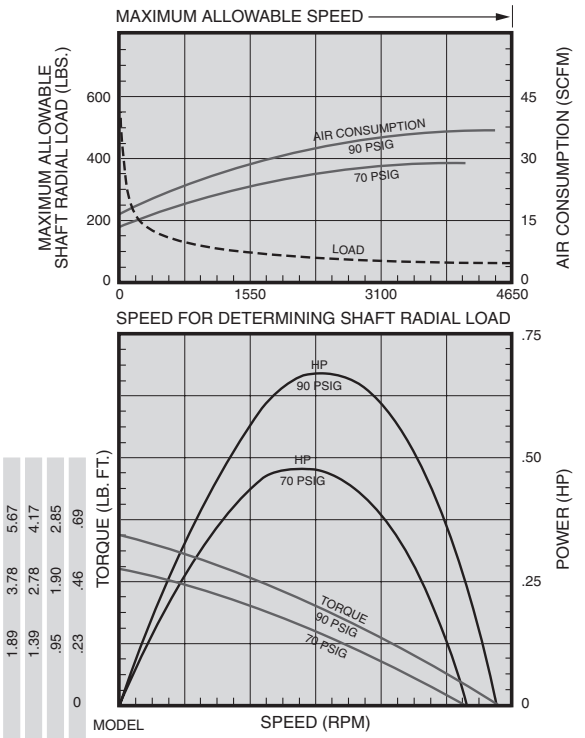

MODEL	SPEED (RPM)		
M007RVR000AR4	6965	13930	20895
M007RVR004AR4	1550	3100	4650
M007RVR006AR4	1060	2120	3180
M007RVR009AR4	780	1560	2340

Series M007 Multi-Vane Air Motors

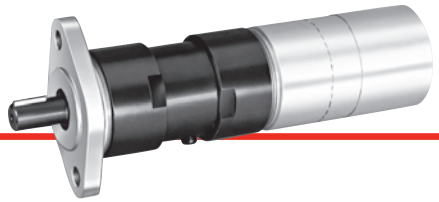

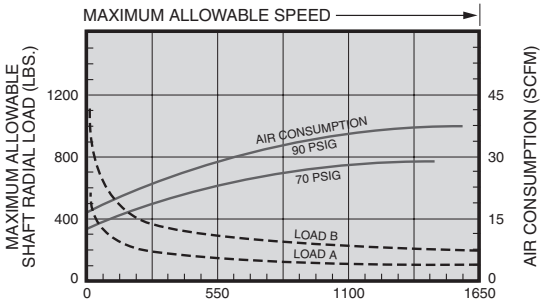

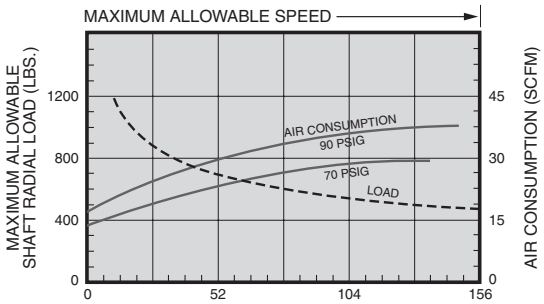

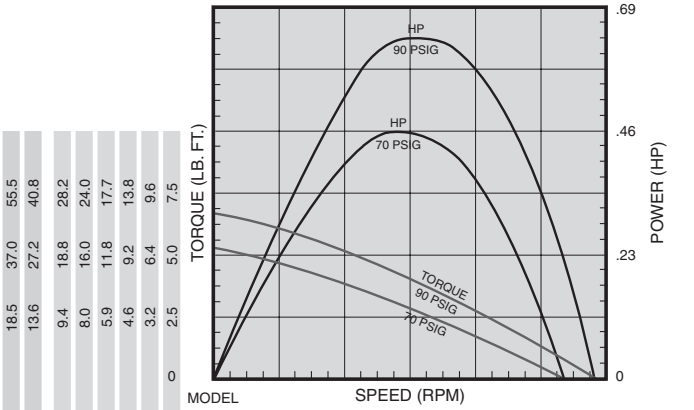

MODEL	SPEED (RPM)			
M007RVR012AR4	550	1100	1650	LOAD CURVE A
M007RVR015AR4	435	870	1305	
M007RVR021AR4	298	596	894	
M007RVR027AR4	235	470	705	
M007RVR037AR4	173	346	519	
M007RVR044AR4	147	294	441	
M007RVR063BR6	102	204	306	LOAD CURVE B
M007RVR086BR6	75	150	225	

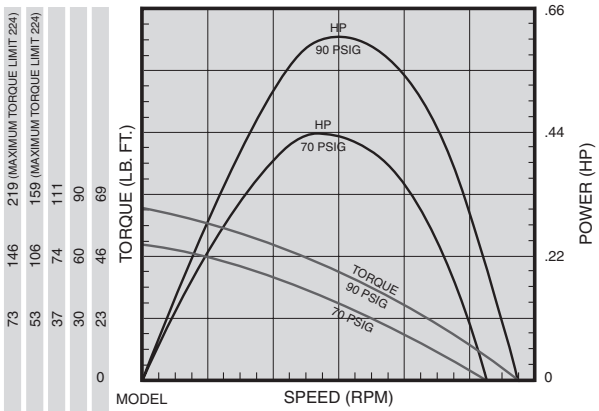

MODEL	SPEED (RPM)		
M007RVR119BR6	52	104	156
M007RVR151BR6	41	82	123
M007RVR188BR6	33	66	99
M007RVR275BR6	22	44	66
M007RVR374BR6	17	34	51

EQUIPMENT OPTIONS

Furnished with Cataloged Models	Standard Options	Extra Options
2 Hole Flange Mounting on Gear Ratios: 000, 004, 006, 009, 012, 015, 021, 027, 037, 044	4 Hole Flange Mounting on Gear Ratios: 000, 004, 006, 009, 012, 015, 021, 027, 037, 044	½" Square Drive Shaft on Gear Ratios: 000, 004, 006, 009, 012, 015, 021, 027, 037, 044
6 Hole Face Mounting on Gear Ratios: 063, 086, 119, 151, 188, 275, 374	Side Inlet and Exhaust Housing (for Reversible Models only)	⅝" Square Drive Shaft on Gear Ratios: 063, 086, 119, 151, 188, 275, 374
½" Round Keyed Shaft on Gear Ratios: 000, 004, 006, 009, 012, 015, 021, 027, 037, 044	⅜"—24 or ½"—20 Threaded Shaft on Gear Ratios: 000, 004, 006, 009, 012, 015, 021, 027, 037, 044	
¾" Round Keyed Shaft on Gear Ratios: 063, 086, 119, 151, 188, 275, 374		

SERIES M007 DIMENSIONS

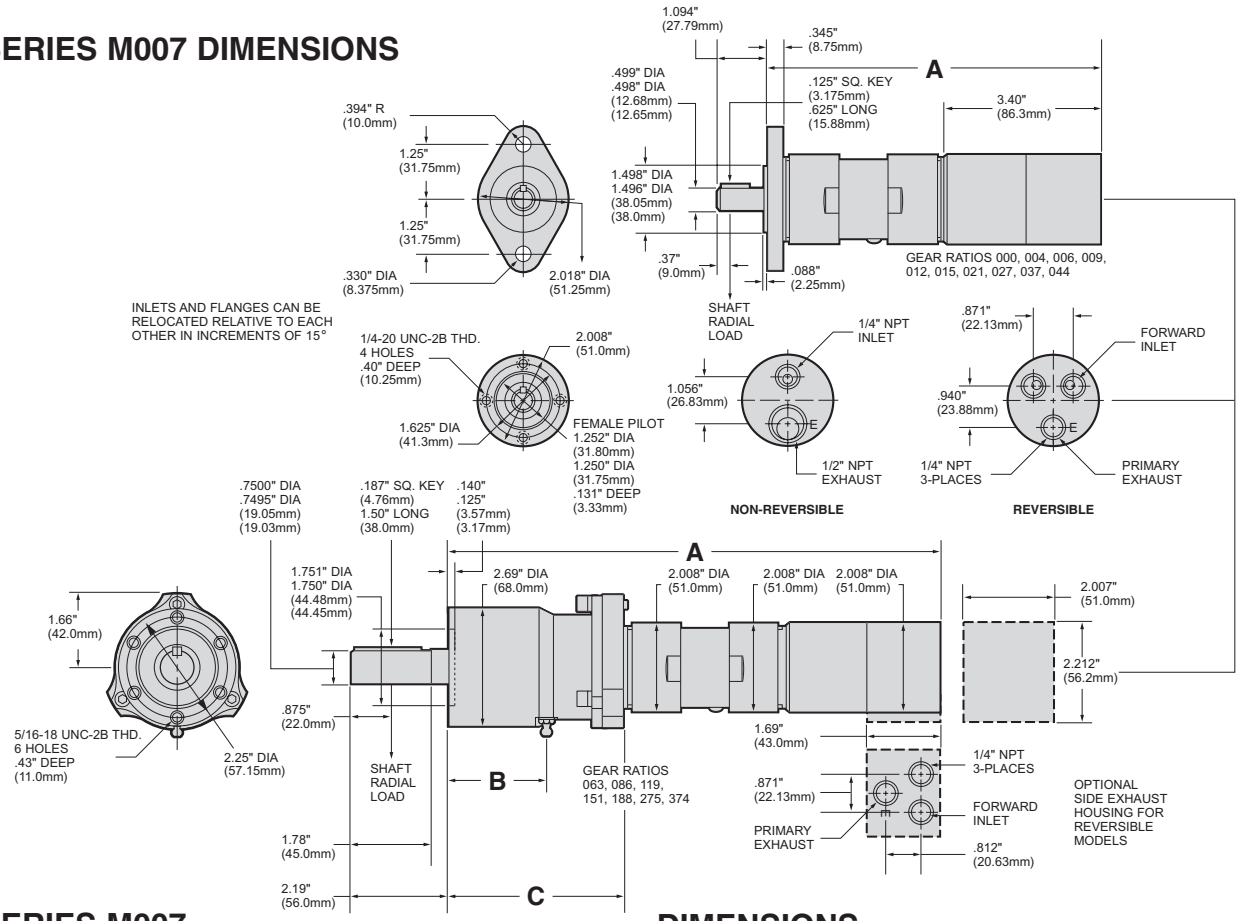

SERIES M007 MODEL NUMBER SYMBOLIZATION

M	007	RV	R	021	A	R4
Motor	HP	Rotation	Air Inlet & Exhaust	Gear Ratio	Flange	Shaft

HP = Approximate horsepower range (.61 to .85)

Rotation = RV Reversible
RH Non-Reversible, Right Hand from Rear of Motor (CCW facing shaft)
LH Non-Reversible, Left Hand from Rear of Motor (CW facing shaft)

Air Inlet & Exhaust = R Rear, S Side (Side Inlet and Exhaust available on Reversible Models only)

Gear Ratio = 021 is 1 to 21, 027 is 1 to 27, etc.

Flange = A 2 Hole Flange, B 4 Hole Face Mounting (on 000, 004, 006, 009, 012, 015, 021, 027, 037, 044 gear ratios), B 6 Hole Face Mounting (on 063, 086, 119, 151, 188, 275, 374 gear ratios).

Shaft = R4 ½" Round Keyed (on 000, 004, 006, 009, 012, 015, 021, 027, 037, 044 gear ratios).
R6 ¾" Round Keyed (on 063, 086, 119, 151, 188, 275, 374 gear ratios).
S4 ½" Square Drive (on 000, 004, 006, 009, 012, 015, 021, 027, 037, 044 gear ratios). Shaft Extension 1.31" (33.27mm)
S5 ⅝" Square Drive (on 063, 086, 119, 151, 188, 275, 374 gear ratios). Shaft Extension 1.25" (31.75mm)
T3 ⅜"-24 UNF-2A Threaded (on 000, 004, 006, 009, 012, 015, 021, 027, 037, 044 gear ratios). Shaft Extension .512" (13mm)
T4 ½" 20 UNF-2A Threaded (on 000, 004, 006, 009, 012, 015, 021, 027, 037, 044 gear ratios). Shaft Extension .512" (13mm)

DIMENSIONS

Gear Ratios (Refer to Model No.)	A		B		C	
	in.	mm	in.	mm	in.	mm
000, 004, 006, 009	7.362	187.0				
012, 015, 021, 027, 037, 044	8.133	206.56				
063, 086	9.343	237.3	.41	10	2.3	58.4
119, 188, 275, 374, 151	10.937	277.8	2.19	56	3.9	99.0

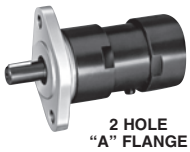

2 HOLE "A" FLANGE MOUNTING

4 HOLE "B" FACE MOUNTING

6 HOLE "B" FACE MOUNTING

2200-Series Power Motors with Thread-On Gearing

SPECIFICATIONS

MODEL	SPINDLE	R.P.M. FREE SPEED	LOAD SPEED @MAX. H.P.	TORQUE STALL lb. ft.	TORQUE STALL Nm	TORQUE OUTPUT @MAX. H.P. lb. ft.	TORQUE OUTPUT @MAX. H.P. Nm	AIR CONSUMPTION @FREE SPEED SCFM	AIR CONSUMPTION @FREE SPEED L/s	SOUND LEVEL @FREE SPEED dB(A)	WEIGHT lbs.	WEIGHT kg.	GEAR REDUCTION
NON-REVERSIBLE - .85 H.P.													
7800-B	1/2" Keyed	18,000	9,000	1.00	1.4	.50	.68	41.7	19.7	78	4.24	1.91	Single
7801-B	1/2" Keyed	4,600	2,400	4.00	5.5	1.86	2.5	41.7	19.7	78	4.24	1.91	Single
7802-B	1/2" Keyed	2,500	1,300	7.50	10.3	3.43	4.7	41.7	19.7	78	4.24	1.91	Single
7803-B	1/2" Keyed	1,200	600	16.00	21.9	7.44	10.2	41.7	19.7	78	5.17	2.33	Double
7804-B	1/2" Keyed	650	320	30.00	41.2	13.95	19.1	41.7	19.7	78	5.17	2.33	Double
7805-B	1/2" Keyed	350	170	55.00	75.5	26.25	36.0	41.7	19.7	78	5.17	2.33	Double
7812-B	1/2"-20 Th'd.	350	170	55.00	75.5	26.25	36.0	41.7	19.7	78	5.17	2.33	Double
7813-B	1/2"-20 Th'd.	650	320	30.00	41.2	13.95	19.1	41.7	19.7	78	5.17	2.33	Double
7814-B	1/2"-20 Th'd.	18,000	9,000	1.00	1.4	.50	.68	41.7	19.7	78	4.24	1.91	Single
7815-B	1/2"-20 Th'd.	1,200	600	16.00	21.9	7.44	10.2	41.7	19.7	78	5.17	2.33	Double
7816-B	1/2"-20 Th'd.	4,600	2,400	4.00	5.5	1.86	2.5	41.7	19.7	78	4.24	1.91	Single
7817-B	1/2"-20 Th'd.	2,500	1,300	7.50	10.3	3.43	4.7	41.7	19.7	78	4.24	1.91	Single
REVERSIBLE - .70 H.P.													
7806-B	1/2" Keyed	13,500	7,000	1.00	1.4	.52	.71	37.3	17.6	85*	4.24	1.91	Single
7807-B	1/2" Keyed	3,400	1,800	4.00	5.5	2.04	2.8	37.3	17.6	85*	4.24	1.91	Single
7808-B	1/2" Keyed	1,800	1,000	7.40	10.2	3.67	5.0	37.3	17.6	85*	4.24	1.91	Single
7809-B	1/2" Keyed	850	450	15.50	21.3	8.16	11.2	37.3	17.6	85*	5.17	2.33	Double
7810-B	1/2" Keyed	450	240	29.00	39.8	15.30	21.0	37.3	17.6	85*	5.17	2.33	Double
7811-B	1/2" Keyed	250	130	54.00	74.0	28.20	38.7	37.3	17.6	85*	5.17	2.33	Double

*Requires installation for reversible motors - shown on page 85.

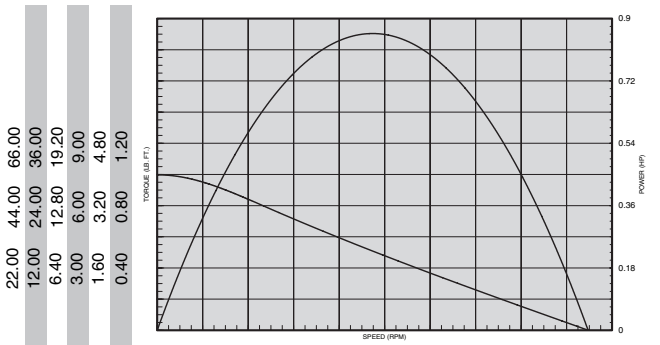

Model			
7800-B (-1B, -2B, -4B)	5,700	11,400	17,100
7801-B (-1B, -2B, -3B, -4B)	1,440	2,880	4,320
7802-B (-1B, -2B, -4B)	795	1,590	2,385
7803-B (-1B, -2B, -3B, -4B)	378	756	1,134
7804-B (-1B, -2B, -3B)	204	408	612
7805-B (-1B, -3B, -4B)	110	220	330

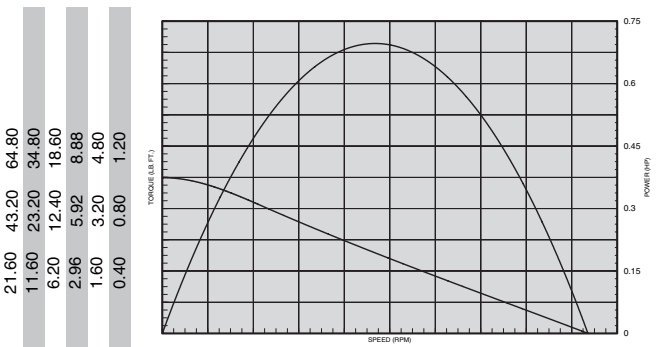

Model			
7806-B (-1B)	4,385	8,770	13,155
7807-B (-1B)	1,086	2,172	3,258
7808-B (-1B)	576	1,152	1,728
7809-B (-1B)	273	546	819
7810-B (-1B)	144	288	432
7811-B (-1B)	80	160	240

STANDARD EQUIPMENT

Steel motor housing, flush-type grease fittings at rotation points for gear and bearing lubrication, exhaust manifold rotatable within 360°, and muffler.

EQUIPMENT OPTIONS

37893 Flange Bracket
37894 Foot Bracket

OPTIONS FOR FORWARD-ROTATION MODELS WITH THREADED SPINDLES

40768 1/2" (12.7 mm) Male Square-Drive Adapter.

31651 1/2" (12.7 mm) I.D. Female Stirring Rod Adapter, 3/8" - 24 Thd.

33907 3/8" (9.5 mm) cap. Drill Chuck.

30018 1/2" (12.7 mm) cap. Drill Chuck.

37893

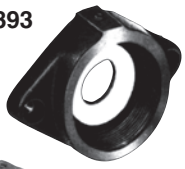

37894

2200-SERIES AND MOUNTING ACCESSORY DIMENSIONS

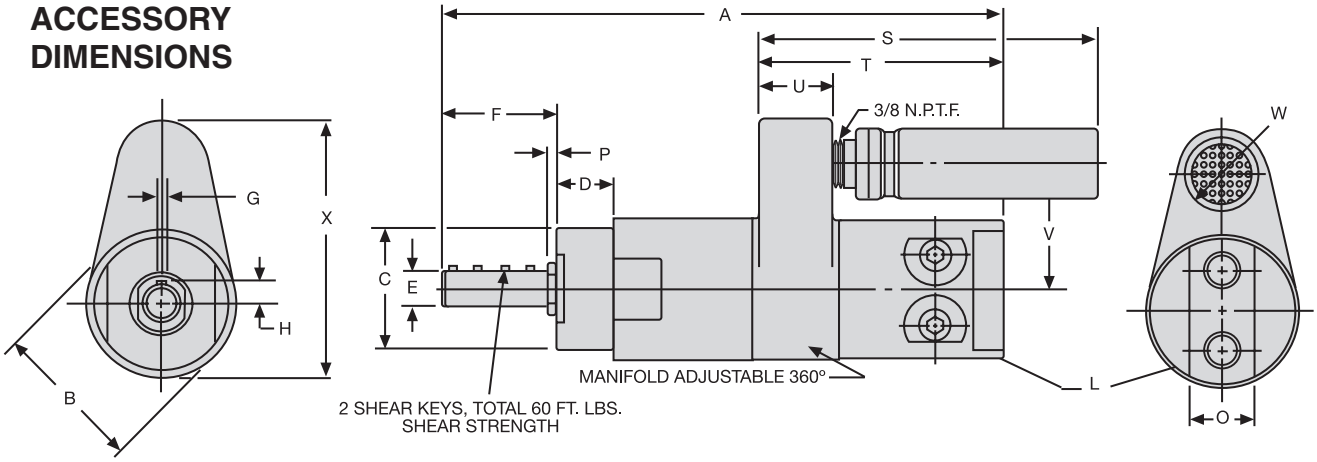

REVERSIBLE ROTATION, SINGLE REDUCTION SHOWN

DIMENSION A		
Gear Reduction	Threaded Spindle	Keyed Spindle
Single	7 178 mm	8 203 mm
Double	8-7/8 225 mm	9-3/4 248 mm

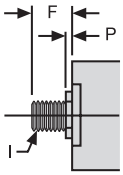

THREADED SPINDLE

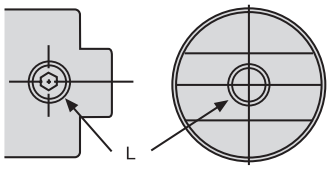

AIR INLETS, FORWARD-ROTATION MOTORS

Scale	B	C	D	E	F-Keyed Spindle	F-Th'd. Spindle	G	H	I	L
Inches	2	1.740 1.760	.818 .838	.4990 .4995	1.588 1.646	.619 .677	.125 .126	.299 .309	1/2-20 UNF-2A	1/4 NPTF
mm	51	44.20 44.70	20.78 21.29	12.67 12.69	40.34 41.81	15.72 17.20	3.18 3.20	7.59 7.85	Thread	Air Inlet

Scale	O	P	S	T	U	V	W-Fwd. Rotation	W Reversible	X-Fwd. Rotation	X Reversible
Inches	7/8	.046 .158	4-7/8	3-1/2	1-1/16	1-13/16	1-3/8	1	3-1/2	3-7/16
mm	22	1.17 4.01	124	89	27	46	35	25	89	87

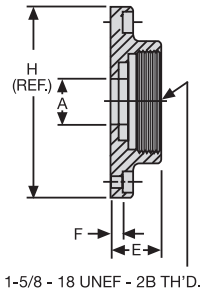

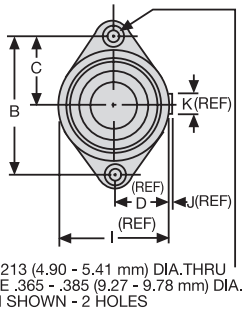

37893 FLANGE MOUNTING BRACKET

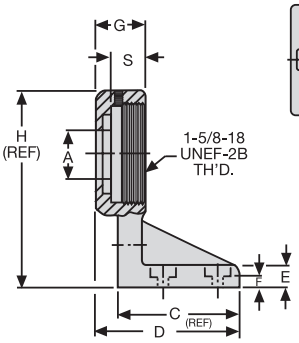

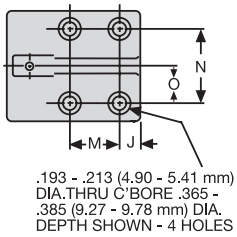

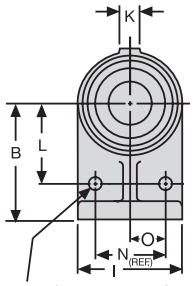

37894 FOOT MOUNTING BRACKET

Scale	A	B	C	D	E
Inches	.771 .791	2.480 2.520	1.240 1.260	31/32	.771 .791
mm	19.58 20.09	62.99 64.00	31.50 32.00	24.61	19.58 20.09

Scale	F	H	I	J	K
Inches	.177 .197	3	1-15/16	1/16	3/8
mm	4.50 5.00	76.20	49.21	1.59	9.53

Scale	A	B	C	D	E	F	G	H
Inches	.771 .791	2.115 2.135	1.843 1.906	2-7/32	.365 .385	.177 .197	.828 .859	3-1/6
mm	19.58 20.09	53.72 54.23	46.81 48.41	56.36	9.27 9.80	4.50 5.00	21.03 21.82	77.79

Scale	I	J	K	L	M	N	O	S
Inches	1-7/8	.334 .354	.312 .437	1.427 1.447	.834 .854	1.240 1.260	.615 .635	.511 .531
mm	47.63	8.84 8.99	8.92 11.10	36.25 36.75	21.18 21.69	31.50 32.00	15.62 16.13	12.98 13.49

2200-Series Power Motors with Bolt-On Gearing

SPECIFICATIONS

MODEL	SPINDLE	R.P.M. FREE SPEED	LOAD SPEED @MAX. H.P.	STALL TORQUE lb. ft.	STALL TORQUE Nm	OUTPUT @MAX. H.P. lb. ft.	OUTPUT @MAX. H.P. Nm	AIR CONSUMPTION @FREE SPEED SCFM	AIR CONSUMPTION @FREE SPEED L/s	SOUND LEVEL @FREE SPEED dB(A)	WEIGHT lbs.	WEIGHT kg.	GEAR REDUCTION
NON-REVERSIBLE - .85 H.P.													
7800-1B	1/2" Keyed	18,000	9,000	1.00	1.4	.50	.68	41.7	19.7	78	4.24	1.91	Single
7801-1B	1/2" Keyed	4,600	2,400	4.00	5.5	1.86	2.5	41.7	19.7	78	4.24	1.91	Single
7802-1B	1/2" Keyed	2,500	1,300	7.50	10.3	3.43	4.7	41.7	19.7	78	4.24	1.91	Single
7803-1B	1/2" Keyed	1,200	600	16.00	21.9	7.44	10.2	41.7	19.7	78	5.17	2.33	Double
7804-1B	1/2" Keyed	650	320	30.00	41.2	13.95	19.1	41.7	19.7	78	5.17	2.33	Double
7805-1B	1/2" Keyed	350	170	55.00	75.5	26.25	36.0	41.7	19.7	78	5.17	2.33	Double
7812-1B	1/2"-20 Th'd.	350	170	55.00	75.5	26.25	36.0	41.7	19.7	78	5.17	2.33	Double
7813-1B	1/2"-20 Th'd.	650	320	30.00	41.2	13.95	19.1	41.7	19.7	78	5.17	2.33	Double
7814-1B	1/2"-20 Th'd.	18,000	9,000	1.00	1.4	.50	.68	41.7	19.7	78	4.24	1.91	Single
7815-1B	1/2"-20 Th'd.	1,200	600	16.00	21.9	7.44	10.2	41.7	19.7	78	5.17	2.33	Double
7816-1B	1/2"-20 Th'd.	4,600	2,400	4.00	5.5	1.86	2.5	41.7	19.7	78	4.24	1.91	Single
7817-1B	1/2"-20 Th'd.	2,500	1,300	7.50	10.3	3.43	4.7	41.7	19.7	78	4.24	1.91	Single
REVERSIBLE - .70 H.P.													
7806-1B	1/2" Keyed	13,500	7,000	1.00	1.4	.52	.71	37.3	17.6	85*	4.36	1.96	Single
7807-1B	1/2" Keyed	3,400	1,800	4.00	5.5	2.04	2.8	37.3	17.6	85*	4.36	1.96	Single
7808-1B	1/2" Keyed	1,800	1,000	7.40	10.2	3.67	5.0	37.3	17.6	85*	4.36	1.96	Single
7809-1B	1/2" Keyed	850	450	15.50	21.3	8.16	11.2	37.3	17.6	85*	5.67	2.55	Double
7810-1B	1/2" Keyed	450	240	29.00	39.8	15.30	21.0	37.3	17.6	85*	5.67	2.55	Double
7811-1B	1/2" Keyed	250	130	54.00	74.0	28.20	38.7	37.3	17.6	85*	5.67	2.55	Double

*Requires installation for reversible motors - shown on page 85.

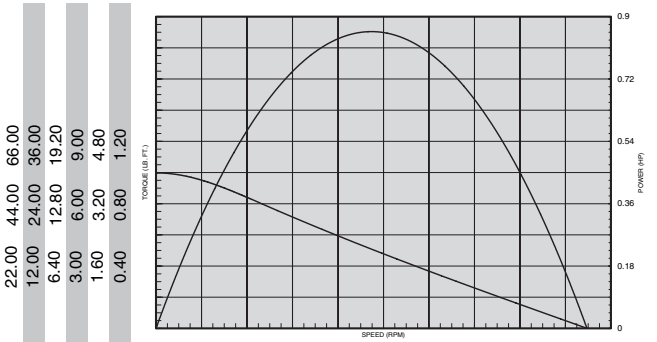

Model			
7800-B (-1B, -2B, -4B)	5,700	11,400	17,100
7801-B (-1B, -2B, -3B, -4B)	1,440	2,880	4,320
7802-B (-1B, -2B, -4B)	795	1,590	2,385
7803-B (-1B, -2B, -3B, -4B)	378	756	1,134
7804-B (-1B, -2B, -3B)	204	408	612
7805-B (-1B, -3B, -4B)	110	220	330

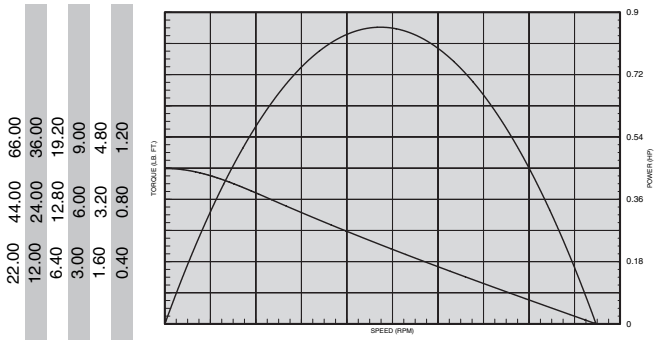

Model			
7814-B (-1B)	5,700	11,400	17,100
7816-B (-1B)	1,440	2,880	4,320
7817-B (-1B)	795	1,590	2,385
7815-B (-1B)	378	756	1,134
7813-B (-1B)	204	408	612
7812-B (-1B)	110	220	330

STANDARD EQUIPMENT

Steel motor housing, flush-type grease fittings at rotation points for gear and bearing lubrication, exhaust manifold rotatable within 360°, and muffler.

EQUIPMENT OPTIONS

37895-1 Foot Bracket

Provisions for flange mounting is standard on all models.

37895-1

OPTIONS FOR FORWARD-ROTATION MODELS WITH THREADED SPINDLES

40768 1/2" (12.7 mm) Male Square-Drive Adapter.

31651 1/2" (12.7 mm) I.D. Female Stirring Rod Adapter.

33907 3/8" (9.5 mm) cap. Drill Chuck.

30018 1/2" (12.7 mm) cap. Drill Chuck.

2200-SERIES AND MOUNTING ACCESSORY DIMENSIONS

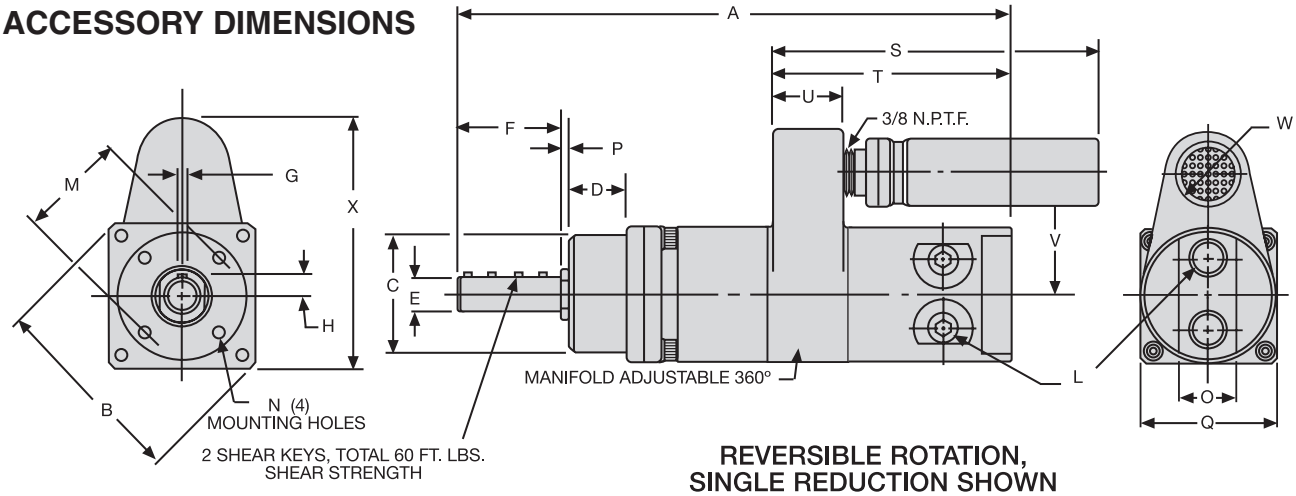

REVERSIBLE ROTATION, SINGLE REDUCTION SHOWN

Models	Gear Reduction	DIMENSION A
7800-1B 7801-1B 7802-1B 7806-1B 7807-1B 7808-1B	Single	8-1/8 206 mm
7803-1B 7804-1B 7805-1B 7809-1B 7810-1B 7811-1B	Double	9-29/32 252 mm
7814-1B 7816-1B 7817-1B	Single	7-5/32 182 mm
7812-1B 7813-1B 7815-1B	Double	8-15/16 227 mm

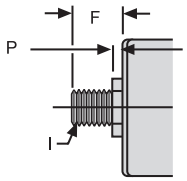

THREADED SPINDLE

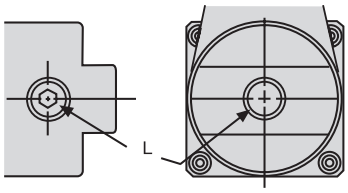

AIR INLETS, SINGLE DIRECTION MOTORS

Scale	B	C	D	E	F-Keyed Spindle	F-Th'd. Spindle	G	H	I	L	M	N
Inches	2-11/16	1.7490 1.7495	.781 .812	.4990 .4995	1.615 1.653	.646 .684	.125 .126	.299 .309	1/2"-20 UNF-2A	1/4 NPTF	1.432 1.442	10-24 UNC-2B
mm	68	44.42 44.44	19.84 20.62	12.67 12.69	41.02 41.99	16.41 17.37	3.18 3.20	7.59 7.85	Thread	Air Inlet	36.37 36.63	Thread

Scale	O	P	Q	S	T	U	V	W-Fwd. Rotation	W R ibl	X-Fwd. R i	X R ibl
Inches	7/8	.113 .165	2	4-7/8	3-1/2	1-1/16	1-13/16	1-3/8	1	3-1/2	3-7/16
mm	22	2.87 4.19	51	124	89	27	46	35	25	89	87

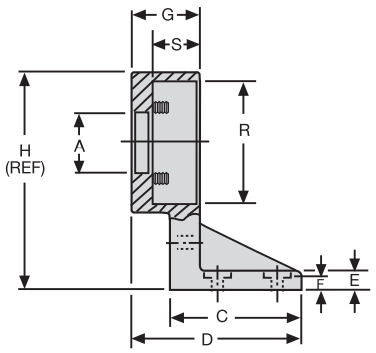

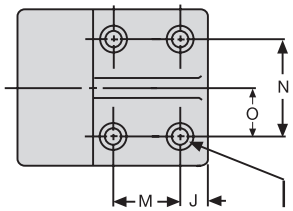

.193 - .213 (4.90 - 5.41 mm) DIA. THRU
C'BORE .365 - .385 (9.27 - 9.78 mm) DIA.
DEPTH SHOWN - 4 HOLES

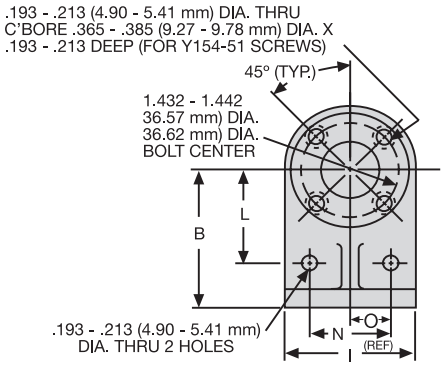

37895-1 FOOT MOUNTING BRACKET

Scale	A	B	C	D	E	F	G	H
Inches	.865 .886	2.115 2.135	1.843 1.875	2.421 2.453	.281 .343	.177 .197	.958 .978	3-1/8
mm	21.97 22.48	53.72 54.23	46.81 47.63	61.49 62.31	7.14 8.71	4.50 5.00	24.33 24.84	79.38

Scale	I	J	L	M	N	O	R	S
Inches	2	.333 .353	1.427 1.447	.833 .853	1.240 1.260	.615 .635	1.750 1.751	.640 .687
mm	50.80	8.46 8.97	36.25 36.75	21.16 21.67	31.50 32.00	15.62 16.13	44.45 44.48	16.26 17.45

2200-Series Power Motors with 44-Series Gearing

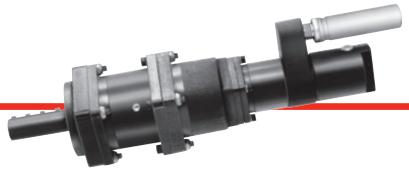

SPECIFICATIONS

MODEL	SPINDLE	R.P.M. FREE SPEED	R.P.M. LOAD SPEED @MAX. H.P.	TORQUE STALL lb. ft.	TORQUE STALL Nm	TORQUE OUTPUT @MAX. H.P. lb. ft.	TORQUE OUTPUT @MAX. H.P. Nm	AIR CONSUMPTION @FREE SPEED SCFM	AIR CONSUMPTION @FREE SPEED L/s	SOUND LEVEL @FREE SPEED dB(A)	WEIGHT lbs.	WEIGHT kg.	GEAR REDUCTION
NON-REVERSIBLE - .90 H.P.													
8276-1A	7/8" Keyed	700	350	27.0	37.0	13.5	18.5	41.6	19.6	78	10.10	4.55	2
8276-2A	7/8" Keyed	350	180	50.0	68.0	26.0	36.0	41.6	19.6	78	10.10	4.55	2
8276-3A	7/8" Keyed	300	150	60.0	82.0	32.0	43.0	41.6	19.6	78	14.50	6.52	3
8276-4A	7/8" Keyed	160	90	105.0	143.0	53.0	72.0	41.6	19.6	78	14.50	6.52	3
8276-5A**	7/8" Keyed	100	50	**150.0	206.0	95.0	130.0	41.6	19.6	78	14.50	6.52	3
8276-6A**	7/8" Keyed	50	25	**150.0	206.0	**150.0	206.0	41.6	19.6	78	14.50	6.52	3
REVERSIBLE - .65 H.P.													
8274-A	7/8" Keyed	800	450	13.0	18.0	7.6	10.5	35.0	16.5	83*	10.10	4.55	2
8274-1A	7/8" Keyed	475	250	23.0	32.0	14.0	19.0	35.0	16.5	83*	10.10	4.55	2
8274-2A	7/8" Keyed	250	130	43.0	59.0	26.0	36.0	35.0	16.5	83*	10.10	4.55	2
8274-3A	7/8" Keyed	200	110	52.0	71.0	31.0	42.0	35.0	16.5	83*	14.50	6.52	3
8274-4A	7/8" Keyed	120	60	91.0	125.0	57.0	78.0	35.0	16.5	83*	14.50	6.52	3
8274-5A**	7/8" Keyed	65	35	**150.0	206.0	98.0	134.0	35.0	16.5	83*	14.50	6.52	3
8274-6A**	7/8" Keyed	35	18	**150.0	206.0	**150.0	206.0	35.0	16.5	83*	14.50	6.52	3

*Requires installation for reversible motors - shown on page 85.

**NOTE: Maximum torque recommended for planetary gear system requires shear key with 150 ft./lbs. shear strength.

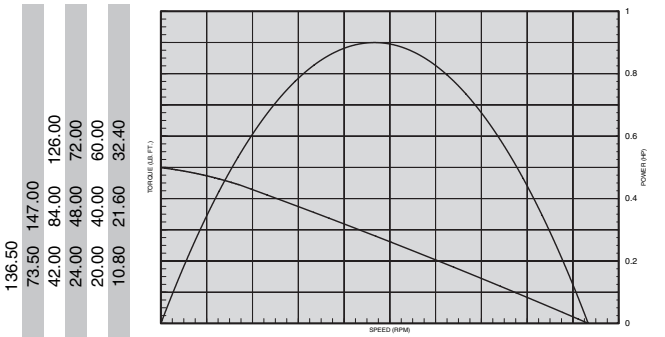

Model			
8276-1A	225	450	675
8276-2A	112	224	336
8276-3A	97	194	291
8276-4A	52	104	156
8276-5A*	32	64	96
8276-6A*	16	32	48

*NOTE: Maximum torque recommended for planetary gear system on these models requires shear key with 150 ft./lbs. shear strength.

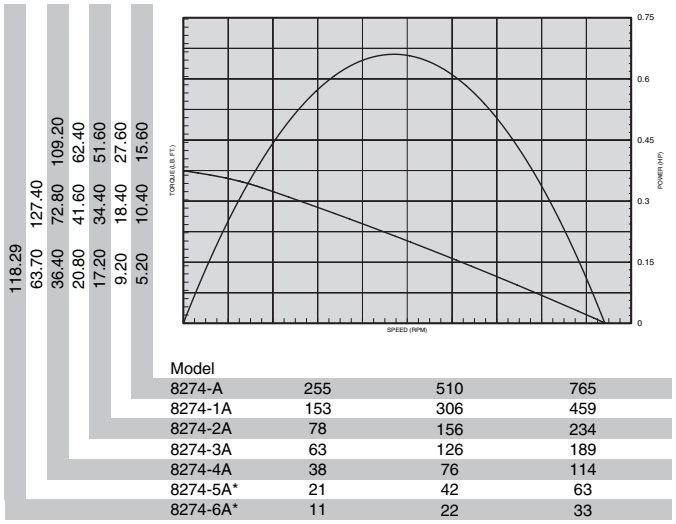

Model			
8274-A	255	510	765
8274-1A	153	306	459
8274-2A	78	156	234
8274-3A	63	126	189
8274-4A	38	76	114
8274-5A*	21	42	63
8274-6A*	11	22	33

*NOTE: Maximum torque recommended for planetary gear system on these models requires shear key with 150 ft./lbs. shear strength.

STANDARD EQUIPMENT

Steel motor housing, flush-type grease fittings at rotation points for gear and bearing lubrication, exhaust manifold rotatable within 360°, and muffler.

EQUIPMENT OPTIONS

37892-1 Foot Bracket

NOTE: Gear housing has precision pilot diameter and four mounting holes (5/16" - 24) for flange mounting.

37892-1

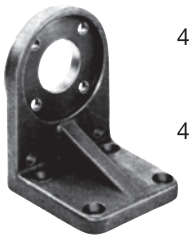

OPTIONS FOR SPECIFIED MODELS

41784 3/4" (19.1 mm) Male Square-Drive Adapter for 7/8" (22.23 mm) keyed spindle.

41512 Throttle & Bracket Assembly for forward-rotation nutsetters. See page 168.

41512-1 Throttle & Bracket Assembly for reversible nutsetters. Includes two 41511 throttles and two 43982-1 Quick-Dump Exhaust Valves. See page 168.

2200/44-SERIES AND MOUNTING ACCESSORY DIMENSIONS

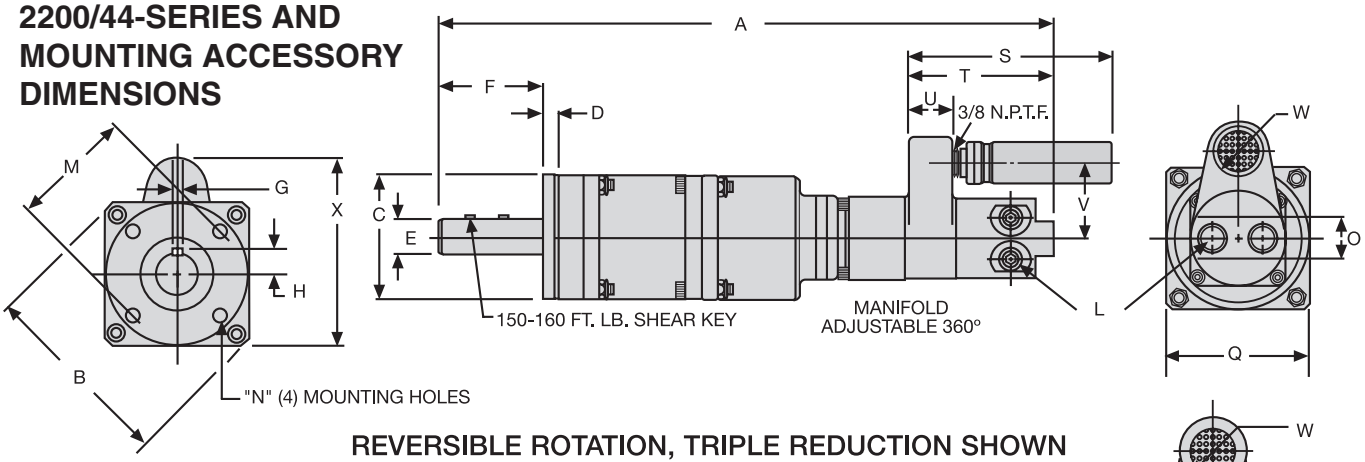

REVERSIBLE ROTATION, TRIPLE REDUCTION SHOWN

Gear Reduction	Dimension A
Double	11-5/16 303 mm
Triple	14-3/4 375 mm

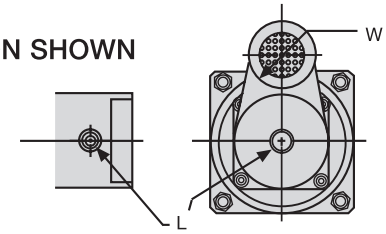

AIR INLETS, FORWARD-ROTATION MOTORS

Scale	B	C	D	E	F	G	H	L	M	N
Inches	4.090 4.110	2.996 2.998	.369 .374	.8743 .8748	2.483 2.559	.1872 .1875	.528 .531	1/4 NPTF	2.495 2.505	5/16-24 UNF-2B
mm	103.89 104.39	76.10 76.15	9.37 9.50	22.21 22.22	63.07 65.00	4.75 4.76	13.41 13.49	Air Inlet	63.37 63.63	Thread

Scale	O	Q	S	T	U	V	W-Fwd. Rotation	W Reversible	X Reversible	X Single
Inches	7/8	3	4-7/8	3-1/2	1-1/6	1-13/16	1-3/8	1	3-15/16	4
mm	22	76	124	89	27	46	35	25	100	102

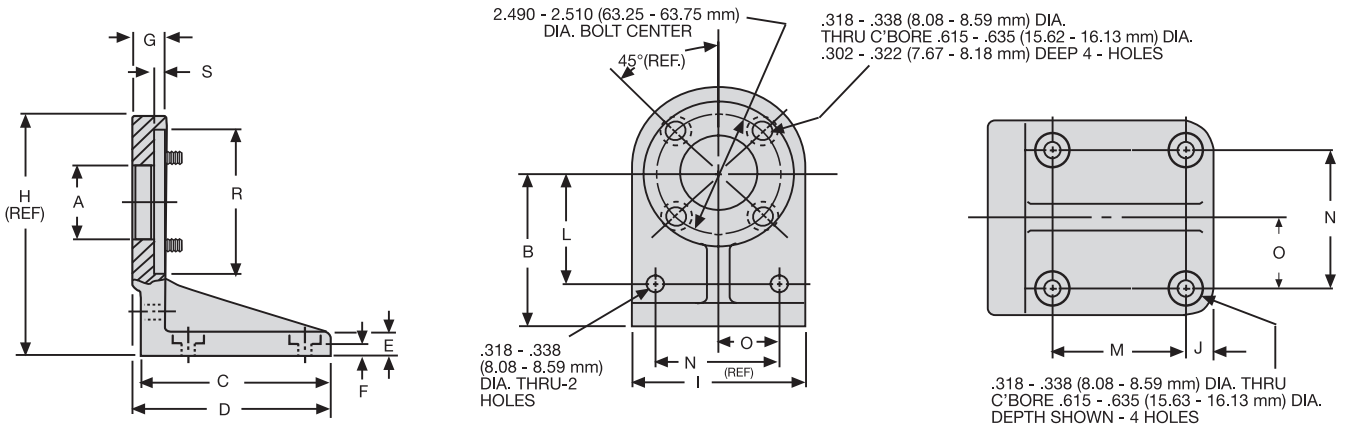

37892-1 FOOT MOUNTING BRACKET

Scale	A	B	C	D	E	F	G	H
Inches	1.490 1.510	3.115 3.135	3.781 3.843	3.968 4.062	.437 .562	.240 .260	.671 .718	4.812 4.937
mm	37.85 38.35	79.12 79.63	96.04 97.61	100.79 103.17	11.10 14.27	6.10 6.60	17.04 18.24	122.22 125.40

Scale	I	J	L	M	N	O	R	S
Inches	3-1/2	.490 .510	2.240 2.260	2.365 2.385	2.490 2.510	1.240 1.260	2.999 3.000	.240 .260
mm	88.90	12.45 12.95	56.90 57.40	60.07 60.58	63.25 63.75	31.50 32.00	76.17 76.20	6.10 6.60

Series 1801 and 1841 Multi-Vane Air Motors

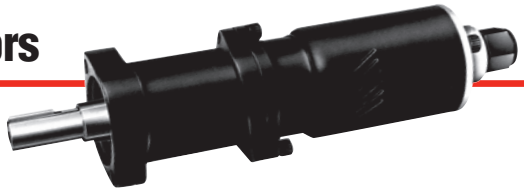

SPECIFICATIONS

Model	Max. Power		Speed at Max. Power	Free Speed▲	Starting Torque		Stall Torque		Air Consumption at Max. Power		Weight	
	hp	kw	rpm	rpm	lb.-ft.	Nm	lb.-ft.	Nm	scfm	m³/m	lb.	kg
Non-Reversible Direction of rotation is counterclockwise when facing the shaft.												
1801N	1.40	1.04	918	1990	10.5	14.2	14	19.0	46	1.3	5⅜	2.44
1801P	1.35	1.01	500	1050	17.2	23.3	23	31.2	46	1.3	5¾	2.61
1801Q	1.35	1.01	300	650	30.0	40.7	40	54.2	46	1.3	5¾	2.61
1801U	1.35	1.01	205	435	41.0	55.6	55	74.6	46	1.3	5¾	2.61
1801W	1.35	1.01	175	370	52.0	70.5	70	94.9	46	1.3	5¾	2.61
Reversible												
1841N	1.2	.89	800	1700	9.3	12.6	12.5	17.0	43	1.22	5½	2.50
1841P	1.1	.82	430	900	15.0	20.3	20.0	27.1	43	1.22	5⅞	2.67
1841Q	1.1	.82	260	550	27.0	36.6	36.0	48.8	43	1.22	5⅞	2.67
1841U	1.1	.82	175	380	37.0	50.2	50.0	67.8	43	1.22	5⅞	2.67
1841W	1.1	.82	150	320	45.0	61.0	60.0	81.4	43	1.22	5⅞	2.67

▲ALL models must be operated with sufficient load to prevent speed from exceeding maximum allowable speed shown on performance curve.
Performance figures are at 90 psig (620 kPa) air pressure.

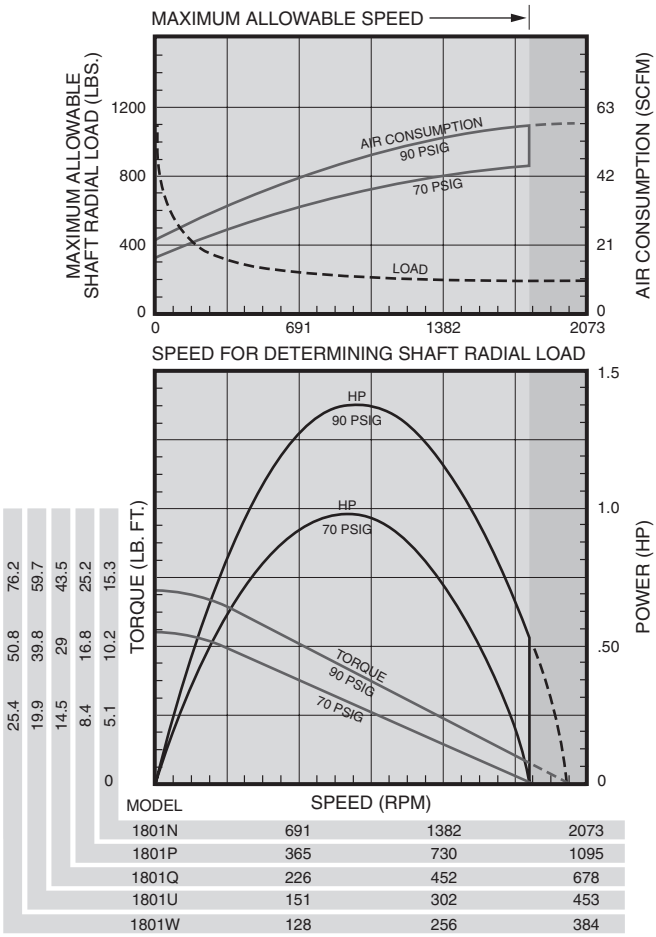

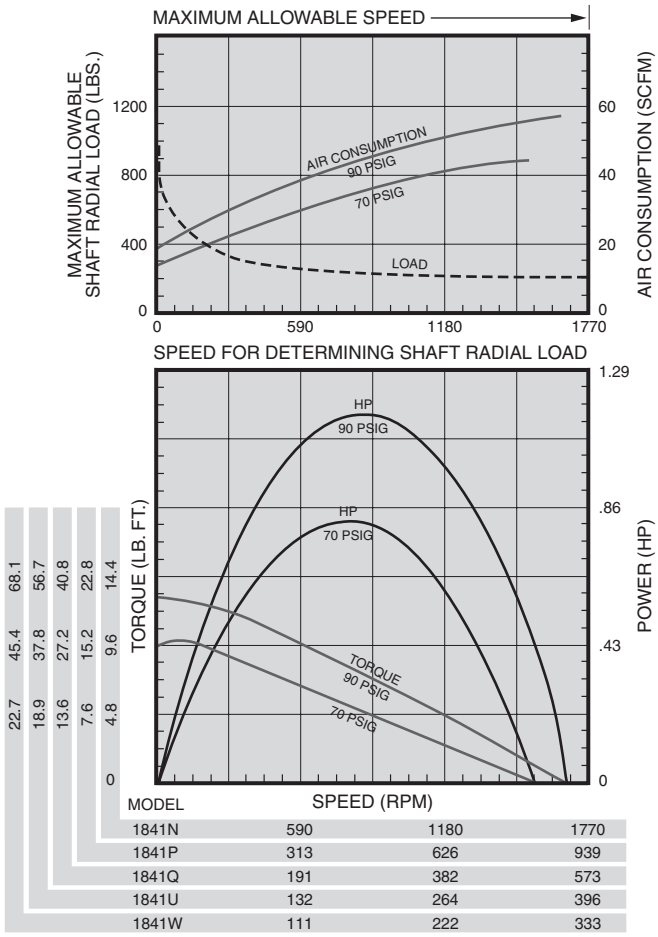

SERIES 1801 AND 1841 DIMENSIONS

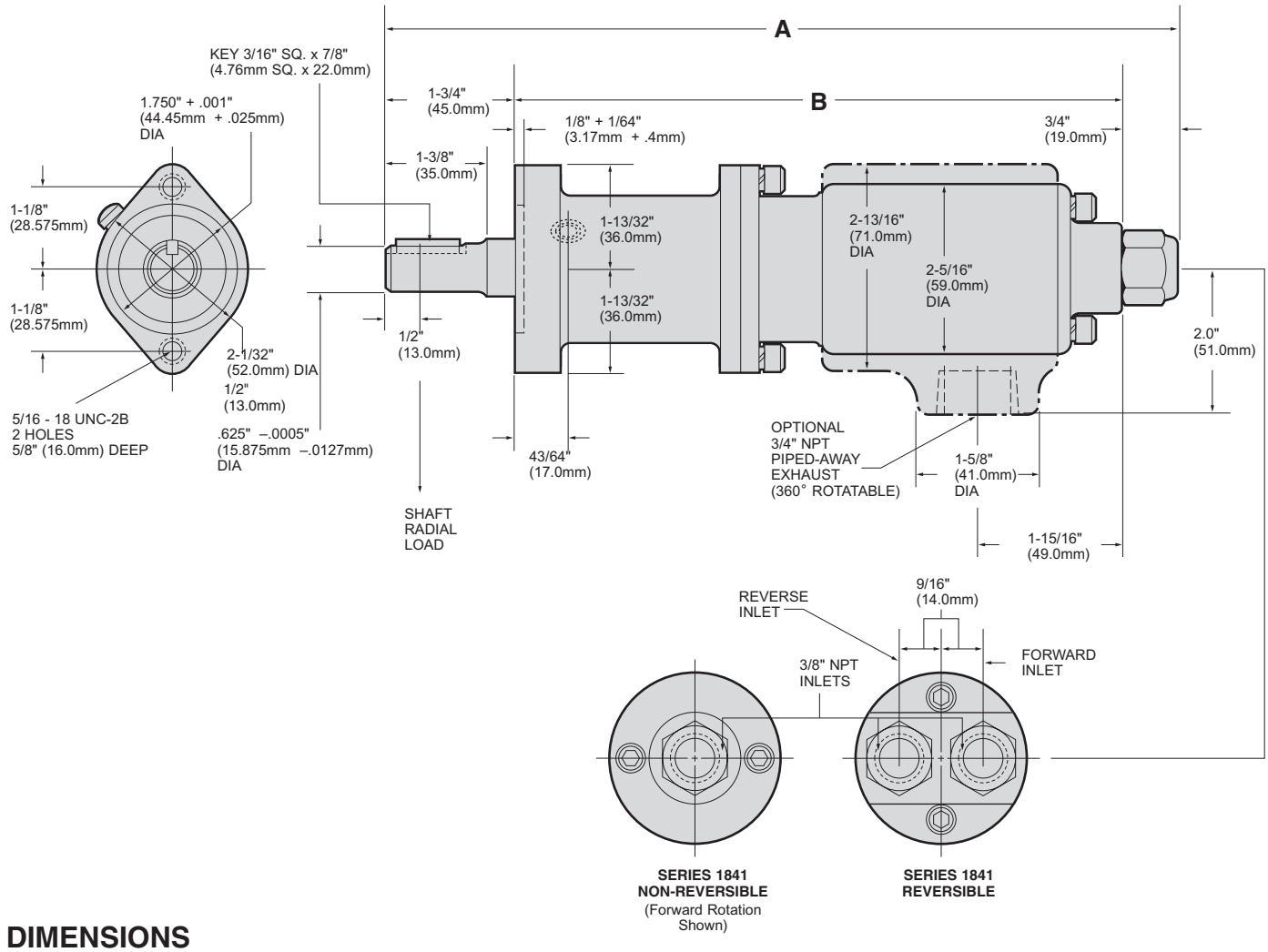

DIMENSIONS

Models	A		B	
	in.	mm	in.	mm
1801N, 1841N	9 7/16	240	6 15/16	176
1801P, 1801Q, 1801U, 1801W, 1841P, 1841Q, 1841U, 1841W	10 13/16	275	8 5/16	211

EQUIPMENT OPTIONS

Furnished with Cataloged Models	Extra Options
2 Hole Face Mounting	R1801-A123 Exhaust Deflector Assembly with ¾" Pipe Tap
	*½" Square Drive Shaft on Gear Ratios: P, Q, U Shaft Extension 1.19" (30.23mm) *⅝" Square Drive Shaft on Gear Ratios: W Shaft Extension 1.19" (30.23mm)

*To order Motor with Square Drive Shaft, add the suffix "2" to the Model Number. Example: 1841Q2.

Series 3800 and 3840 Multi-Vane Air Motors

SPECIFICATIONS

Model	Max. Power		Speed at Max. Power	Free Speed▲	Starting Torque		Stall Torque		Air Consumption at Max. Power		Weight	
	hp	kw	rpm	rpm	lb.-ft.	Nm	lb.-ft.	Nm	scfm	m^3/m	lb.	kg
Non-Reversible Direction of rotation is counterclockwise when facing the shaft.												
3800M	1.55	1.16	520	1100	24	32.5	33	44.8	48	1.36	7⅛	3.23
3800P	1.45	1.08	285	600	42	57	56.5	76.6	48	1.36	8½	3.86
3800Q	1.45	1.08	180	375	62	84	83.5	113	48	1.36	8½	3.86
3800R	1.45	1.08	150	320	72	98	96	130	48	1.36	8½	3.86
3800S	1.45	1.08	120	255	88	119	118	160	48	1.36	8½	3.86
3800U	1.45	1.08	105	220	105	142	140	189	48	1.36	8½	3.86
Reversible												
3840M	1.40	1.04	390	825	23	31.2	31.5	42.7	44	1.25	7⅜	3.35
3840P	1.35	1.01	215	440	40	54.2	53.5	72.6	44	1.25	8¾	3.97
3840Q	1.35	1.01	130	280	60	81.4	80	106	44	1.25	8¾	3.97
3840R	1.35	1.01	122	238	69	93	92	125	44	1.25	8¾	3.97
3840S	1.35	1.01	100	190	86	116	115	156	44	1.25	8¾	3.97
3840U	1.35	1.01	83	162	100	135	134	181	44	1.25	8¾	3.97

▲ALL models must be operated with sufficient load to prevent speed from exceeding maximum allowable speed shown on performance curve.
Performance figures are at 90 psig (620 kPa) air pressure.

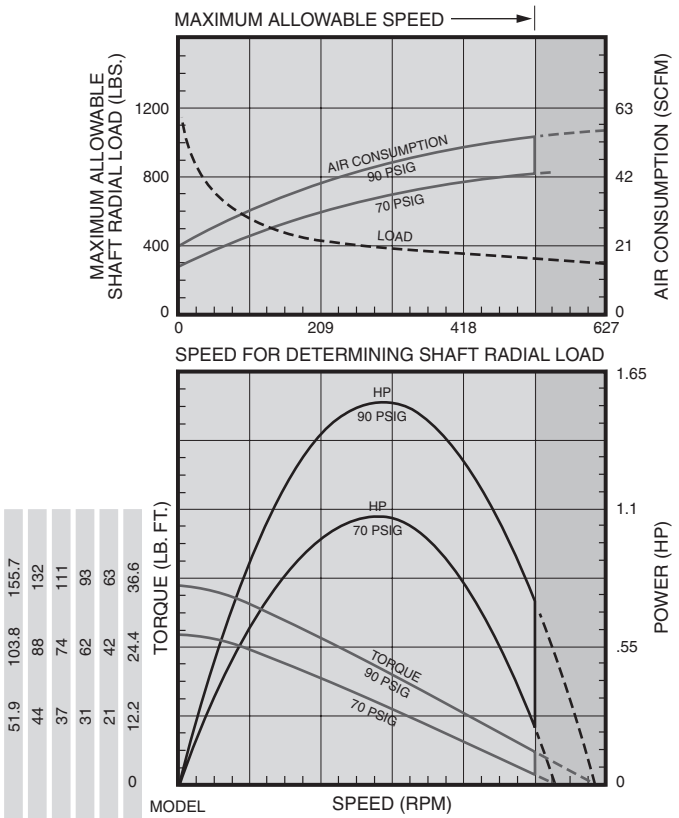

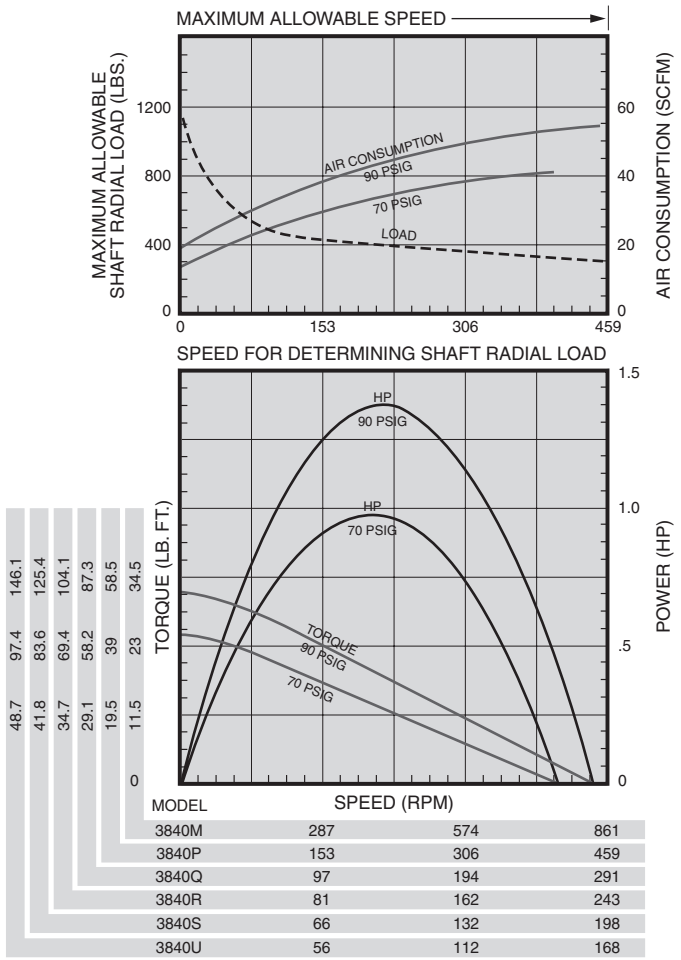

SERIES 3800 AND 3840 DIMENSIONS

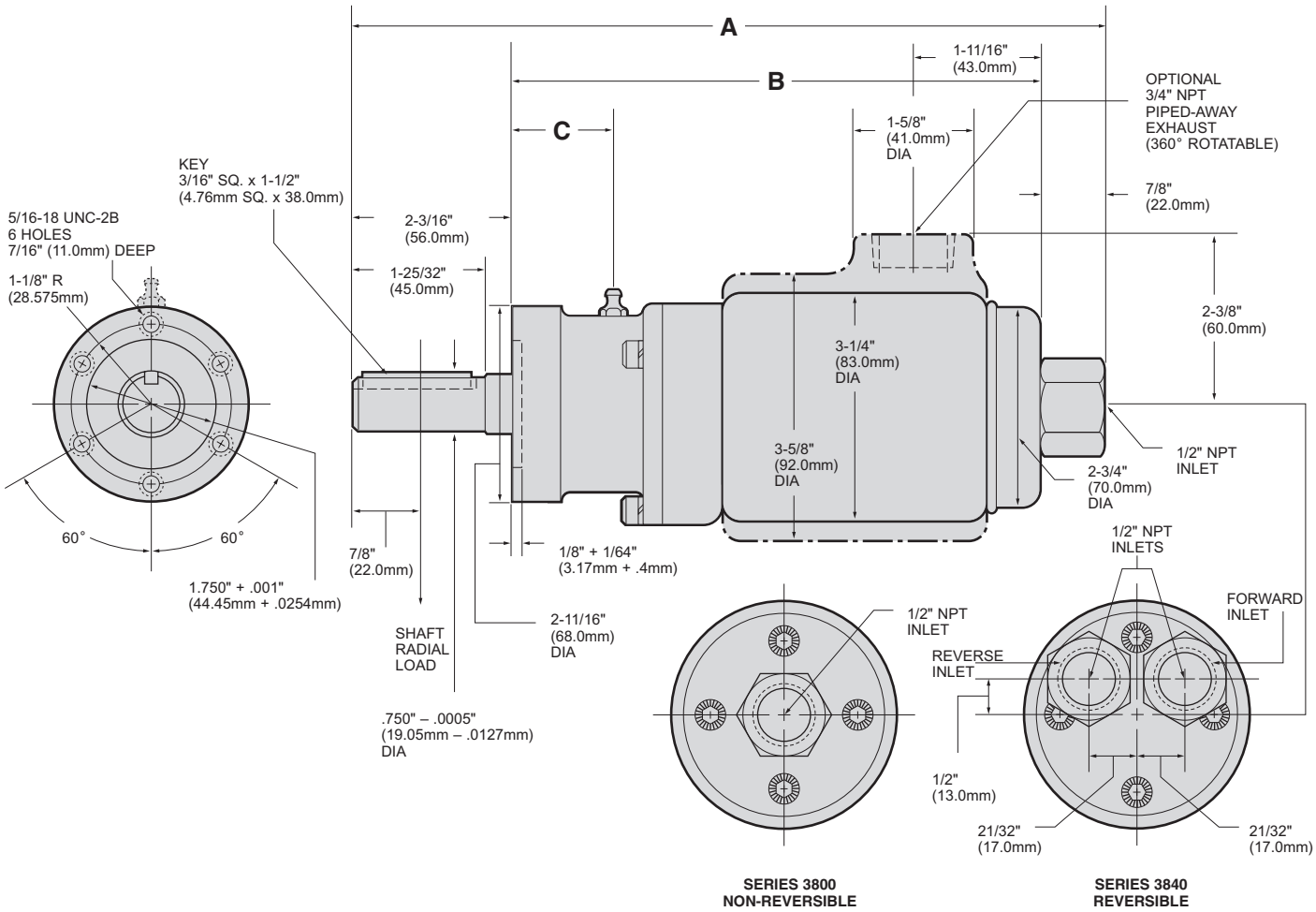

DIMENSIONS

MODELS	A		B		C	
	in.	mm	in.	mm	in.	mm
3800M, 3840M	10 1/16	256	7	178	1 1/16	27
3800P, 3800Q, 3800R, 3800S, 3800U 3840P, 3840Q, 3840R, 3840S, 3840U	11 3/4	299	8 11/16	221	2 3/16	56

EQUIPMENT OPTIONS

Furnished with Cataloged Models	Extra Options
6 Hole Face Mounting	R3800-A123 Exhaust Deflector Assembly with 3/4" Pipe Tap
	*5/8" Square Drive Shaft Shaft Extension 1.25" (31.75mm)

*To order Motor with Square Drive Shaft, add the suffix “2” to the Model Number. Example: 3840Q2.

44-Series Power Motors

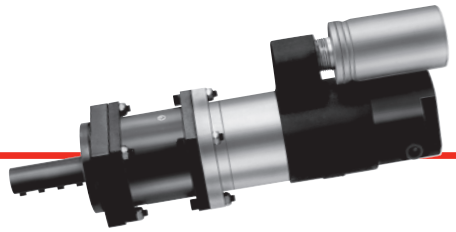

SPECIFICATIONS

MODEL	SPINDLE	R.P.M. FREE SPEED	R.P.M. LOAD SPEED @MAX. H.P.	TORQUE STALL lb. ft.	TORQUE STALL Nm	TORQUE OUTPUT @MAX. H.P. lb. ft.	TORQUE OUTPUT @MAX. H.P. Nm	AIR CONSUMPTION @FREE SPEED SCFM	AIR CONSUMPTION @FREE SPEED L/s	SOUND LEVEL @FREE SPEED dB(A)	WEIGHT lbs.	WEIGHT kg.	GEAR REDUCTION
NON-REVERSIBLE - 2.0 H.P.													
8200-A	7/8" Keyed	275	140	124.00	168.0	75.00	101.6	95.0	44.8	80	18.24	8.20	Double
8201-A	7/8" Keyed	500	255	70.50	95.5	41.00	55.5	95.0	44.8	80	18.24	8.20	Double
8202-A	7/8" Keyed	900	445	40.50	54.9	24.00	32.5	95.0	44.8	80	18.24	8.20	Double
8204-A	7/8" Keyed	3,500	1,740	10.20	13.8	6.00	8.1	95.0	44.8	80	13.82	5.21	Single
8205-A	7/8" Keyed	14,000	7,000	2.85	3.9	1.50	2.0	95.0	44.8	80	13.82	5.21	Single
REVERSIBLE - 1.9 H.P.													
8206-A	7/8" Keyed	275	150	105.00	142.3	66.5	90.1	93.5	44.1	95*	18.24	8.20	Double
8207-A	7/8" Keyed	500	250	60.00	81.3	39.9	54.1	93.5	44.1	95*	18.24	8.20	Double
8208-A	7/8" Keyed	900	450	35.00	47.4	22.2	30.1	93.5	44.1	95*	18.24	8.20	Double
8209-A	7/8" Keyed	2,000	1,000	15.0	20.3	9.97	13.5	93.5	44.1	95*	13.82	5.21	Single
8210-A	7/8" Keyed	3,500	1,800	8.5	11.5	5.54	7.5	93.5	44.1	95*	13.82	5.21	Single
8211-A	7/8" Keyed	14,000	7,000	2.2	3.0	1.43	1.9	93.5	44.1	95*	13.82	5.21	Single

*Requires installation for reversible motors - shown on page 85.

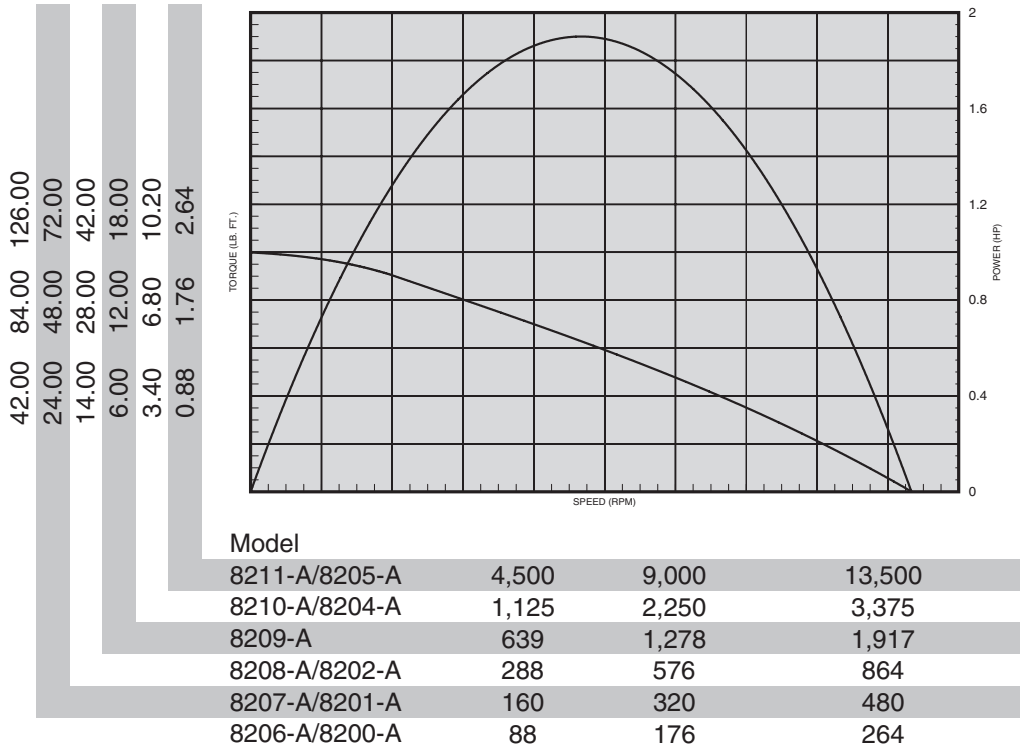

STANDARD EQUIPMENT

Steel motor housing, flush-type grease fittings at rotation points for gear and bearing lubrication, exhaust manifold rotatable within 360°, and muffler.

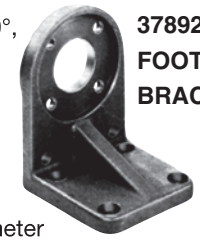

37892-1 FOOT BRACKET

EQUIPMENT OPTIONS

37892-1 Foot Bracket

NOTE: Gear housing has precision pilot diameter and four mounting holes (5/16"- 24) for flange mounting.

OPTIONS FOR SPECIFIED MODELS

41784 3/4" (19.1 mm) Male Square-Drive Adapter for 7/8" (22.23 mm) keyed spindle.

41512 Throttle & Bracket Assembly for forward-rotation nutsetters. See page 168.

41512-1 Throttle & Bracket Assembly for reversible nutsetters. Includes two 41511 throttles and two 43982-1 Quick-Dump Exhaust Valves. See page 168.

44-SERIES AND MOUNTING ACCESSORY DIMENSIONS

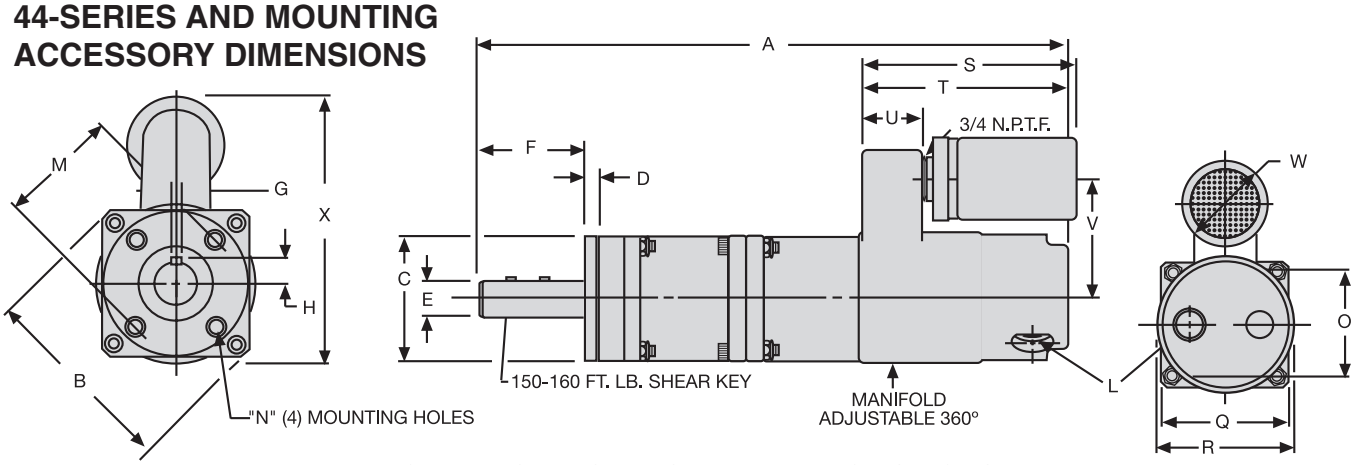

REVERSIBLE ROTATION, DOUBLE REDUCTION SHOWN

Models			Gear Reduction	Dimension A
8203-A 8209-A	8204-A 8210-A	8205-A 8211-A	Single	11-17/64 286 mm
8206-A 8200-A	8207-A 8201-A	8208-A 8202-A	Double	14-1/16 373 mm

Scale	B	C	D	E	F	G	H	L	M	N
Inches	4.090 4.110	2.996 2.998	.369 .374	.8743 .8748	2.483 2.559	.1872 .1875	.528 .531	3/8 NPTF Air Inlet	2.498 2.502	5/16-24 UNF-2B Thread
mm	103.89 104.39	76.10 76.15	9.37 9.50	22.21 22.22	63.07 65.00	4.75 4.76	13.41 13.49		63.45 63.55	

Scale	O	Q	R	S	T	U	V	W	X
Inches	2-1/2	3	3-3/16	5-3/16	5	1-7/16	2-27/32	2	5-7/16
mm	63	76	81	132	127	36	72	51	138

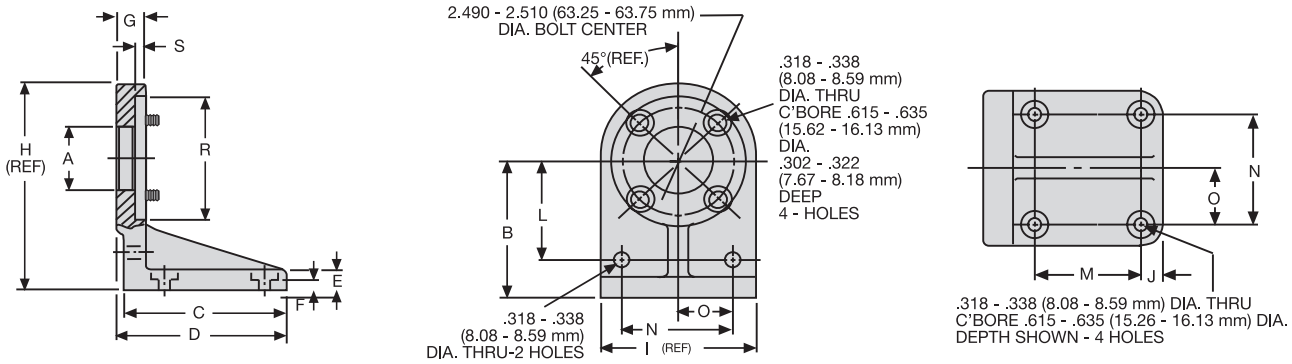

37892-1 FOOT MOUNTING BRACKET

Scale	A	B	C	D	E	F	G	H
Inches	1.490 1.510	3.115 3.135	3.781 3.843	3.968 4.062	.437 .562	.240 .260	.671 .718	4.812 4.937
mm	37.85 38.35	79.12 79.63	96.04 97.61	100.79 103.17	11.10 14.27	6.10 6.60	17.04 18.24	122.22 125.40

Scale	I	J	L	M	N	O	R	S
Inches	3-1/2	.490 .510	2.240 2.260	2.365 2.385	2.490 2.510	1.240 1.260	2.999 3.000	.240 .260
mm	88.90	12.45 12.95	56.90 57.40	60.07 60.58	63.25 63.75	31.50 32.00	76.17 76.20	6.10 6.60

Series 4800 and 4840 Multi-Vane Air Motors

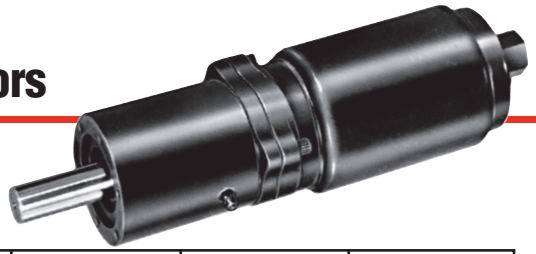

SPECIFICATIONS

Model	Max. Power		Speed at Max. Power	Free Speed▲	Starting Torque		Stall Torque		Air Consumption at Max. Power		Weight	
	hp	kw	rpm	rpm	lb.-ft.	Nm	lb.-ft.	Nm	scfm	m³/m	lb.	kg
Non-Reversible Direction of rotation is counterclockwise when facing the shaft.												
4800D	3.8	2.83	5250	9850	5.8	7.8	7.7	10.4	98	2.77	15¼	6.92
4800K	3.7	2.76	821	1538	35.3	47.8	47	63.7	95	2.69	15¼	6.92
4800M	3.7	2.76	560	1050	51	69.2	69	93.6	95	2.69	15¼	6.92
4800N	3.7	2.76	387	726	75	102	100	136	95	2.69	15¼	6.92
4800P	3.5	2.61	260	510	98	133	131	178	95	2.69	19¾	8.96
4800Q	3.5	2.61	194	375	129	175	173	235	95	2.69	19¾	8.96
4800S	3.5	2.61	146	275	178	241	238	323	95	2.69	19¾	8.96
4800U	3.5	2.61	97	185	265	359	354	480	95	2.69	19¾	8.96
Reversible												
4840D	3.3	2.46	4550	9100	5.2	7.0	6.9	9.4	95	2.69	15¼	6.92
4840K	3.2	2.39	711	1429	32	43.4	42.7	57.9	95	2.69	15¼	6.92
4840M	3.2	2.39	485	975	47.3	64.0	63.0	85.4	95	2.69	15¼	6.92
4840N	3.2	2.39	336	675	67.7	91.7	90.2	122	95	2.69	15¼	6.92
4840P	3	2.24	228	475	93	126	125	170	95	2.69	20⅛	9.13
4840Q	3	2.24	167	350	123	167	165	224	95	2.69	20⅛	9.13
4840S	3	2.24	125	255	161	218	215	292	95	2.69	20⅛	9.13
4840U	3	2.24	83	170	225	305	300	407	95	2.69	20⅛	9.13

▲ ALL models must be operated with sufficient load to prevent speed from exceeding maximum allowable speed shown on performance curve.
Performance figures are at 90 psig (620 kPa) air pressure.

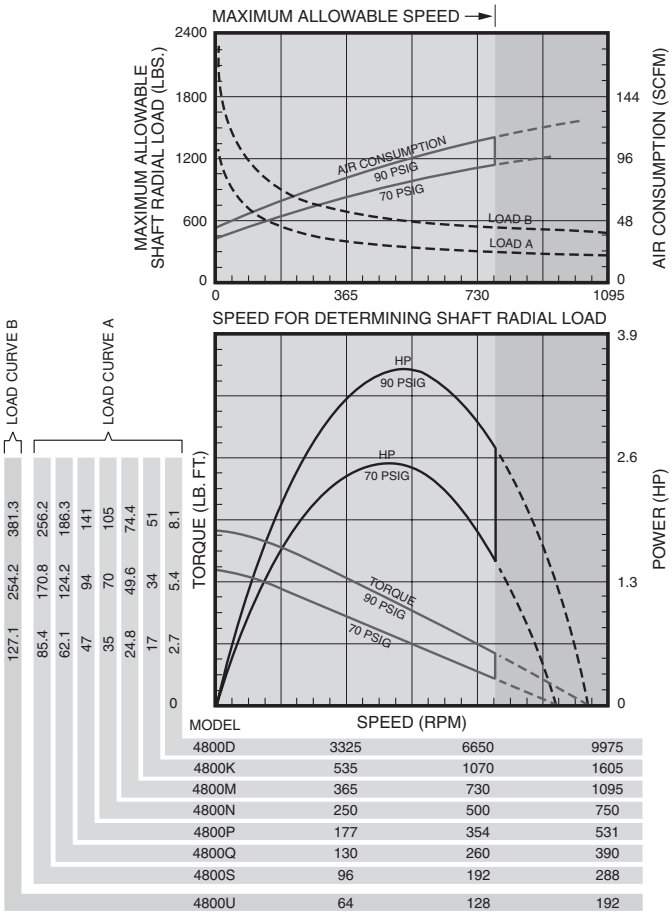

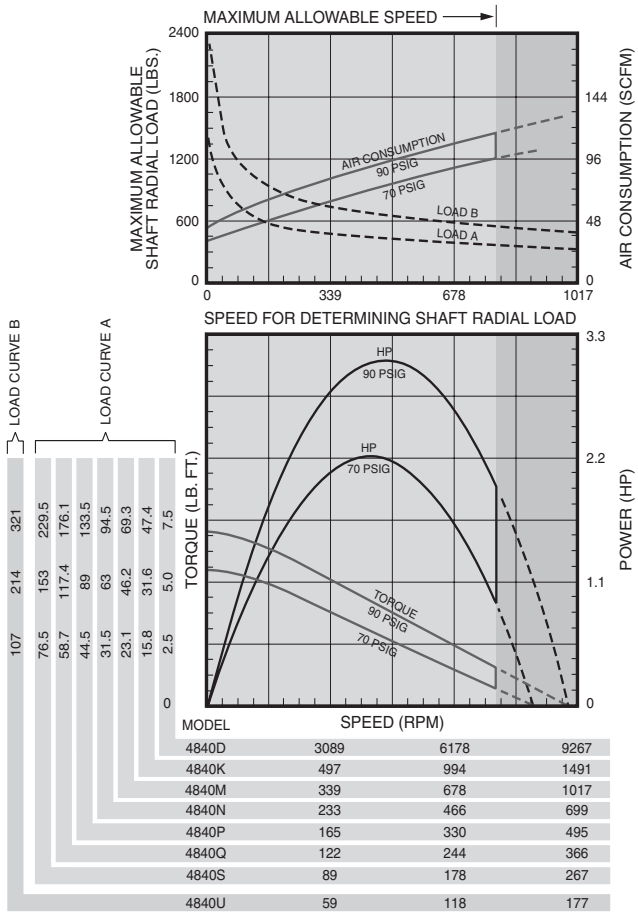

SERIES 4800 AND 4840 DIMENSIONS

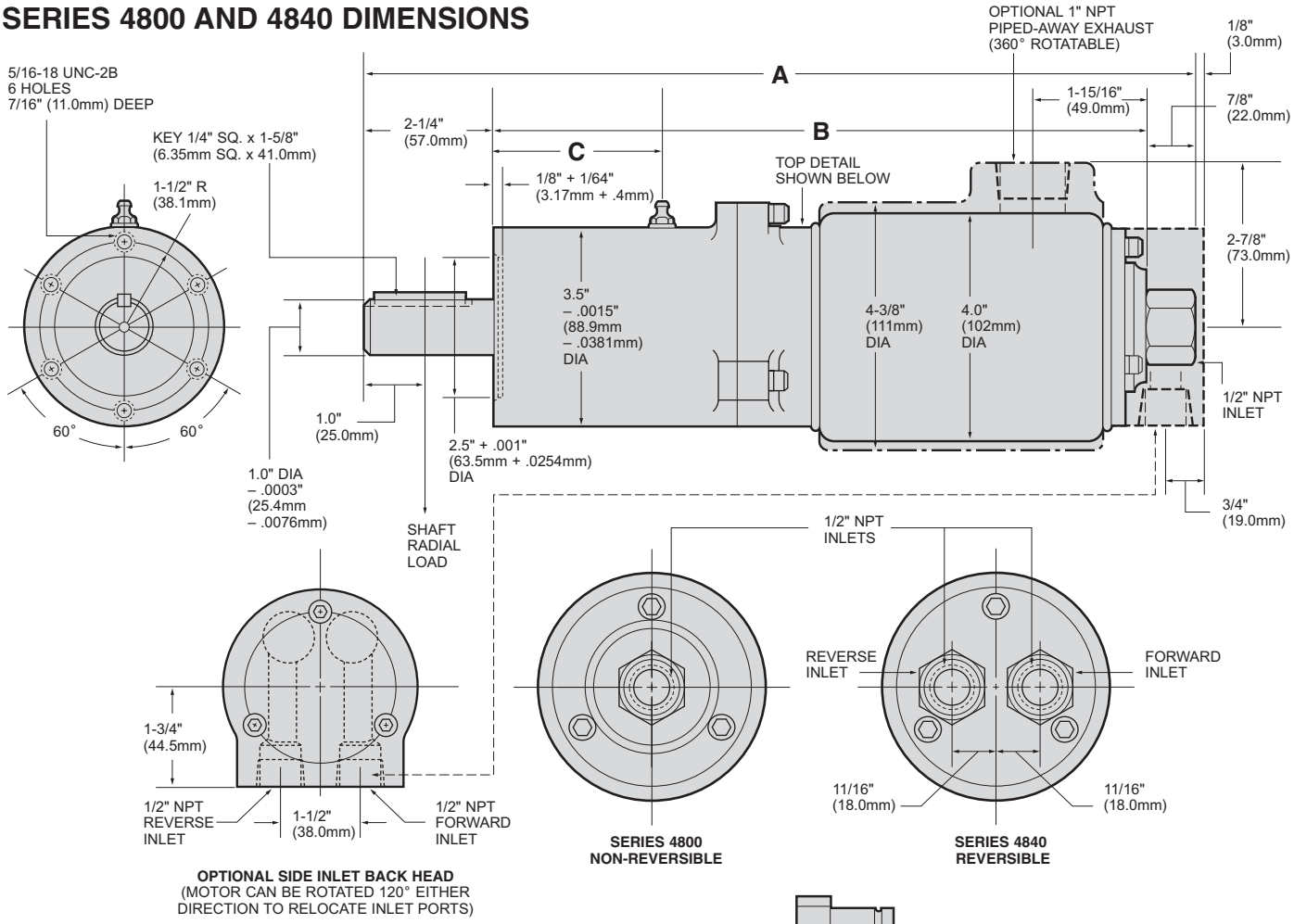

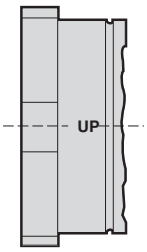

ASSEMBLE TO APPLICATION
IN "UP" ORIENTATION FOR BEST
STARTING CAPABILITY

TOP DETAIL

DIMENSIONS

MODELS	A		B		C	
	in.	mm	in.	mm	in.	mm
4800D, 4800K, 4800M, 4800N 4840D, 4840K, 4840M, 4840N	12⅛	308	9	229	29/32	23
4800P, 4800Q, 4800S, 4800U 4840P, 4840Q, 4840S, 4840U	14½	368	11⅜	289	2⅞	73

EQUIPMENT OPTIONS

Furnished with Cataloged Models	Extra Options
6 Hole Face Mounting	R4800-A123 Exhaust Deflector Assembly with 1" Pipe Tap ** R4901-102 Side Inlet Backhead Requires (3) 518-104 Screws
	* ⅝" Square Drive Shaft on Gear Ratio: M Shaft Extension 1.38" (35.5mm) * ¾" Square Drive Shaft on Gear Ratios: P, Q, S, U Shaft Extension 1.47" (37.44mm)

*To order Motor with Square Drive Shaft, add the suffix “2” to the Model Number. Example: 4840Q2.
**Contact I-R for Model Number with these options.

Series 17RA, 17RB, 34RA and 34RB Multi-Vane Air Motors

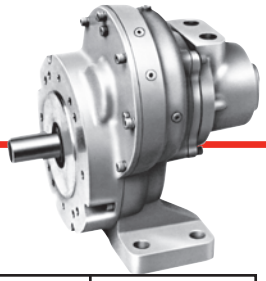

SPECIFICATIONS

Model	Max. Power		Speed at Max. Power	Free Speed▲	Starting Torque		Stall Torque		Air Consumption at Max. Power		Weight	
	hp	kw	rpm	rpm	lb.-ft.	Nm	lb.-ft.	Nm	scfm	m³/m	lb.	kg
Reversible												
17RA005	2.3	1.72	562	1110	24	32.5	37	50.2	103	2.92	40	18.1
17RA008	2.3	1.72	383	760	35	47.5	54.5	73.9	103	2.92	40	18.1
17RA011	2.3	1.72	254	505	53	71.9	82	111	103	2.92	40	18.1
17RA014	2.3	1.72	201	400	67	91	104	141	103	2.92	40	18.1
17RA017	2.3	1.72	169	335	80	109	124	168	103	2.92	40	18.1
17RA022	2.3	1.72	129	255	105	142	163	221	103	2.92	40	18.1
17RB029	2.2	1.64	97	187	120	163	201	273	100	2.83	43	19.5
17RB036	2.2	1.64	79	152	148	201	248	336	100	2.83	43	19.5
17RB045	2.2	1.64	62	121	187	254	312	423	100	2.83	43	19.5
17RB078	2.2	1.64	36	69	327	443	545	739	100	2.83	43	19.5
34RA005	4.1	3.06	560	1080	41	60	69	93.6	183	5.18	72	32.7
34RA008	4.1	3.06	385	740	65	88	101	137	183	5.18	72	32.7
34RA011	4.1	3.06	255	490	98	133	152	206	183	5.18	72	32.7
34RA014	4.1	3.06	201	390	124	168	192	260	183	5.18	72	32.7
34RA017	4.1	3.06	168	325	148	201	229	311	183	5.18	72	32.7
34RA022	4.1	3.06	128	245	195	264	301	408	183	5.18	72	32.7
34RB029	4	2.98	99	187	224	304	374	507	180	5.1	75	34
34RB036	4	2.98	80	152	277	376	462	627	180	5.1	75	34
34RB045	4	2.98	63	121	348	472	581	788	180	5.1	75	34
34RB078	4	2.98	36	69	606	822	1010	1370	180	5.1	75	34

▲ALL models must be operated with sufficient load to prevent speed from exceeding maximum allowable speed shown on performance curve.
Performance figures are at 90 psig (620 kPa) air pressure.

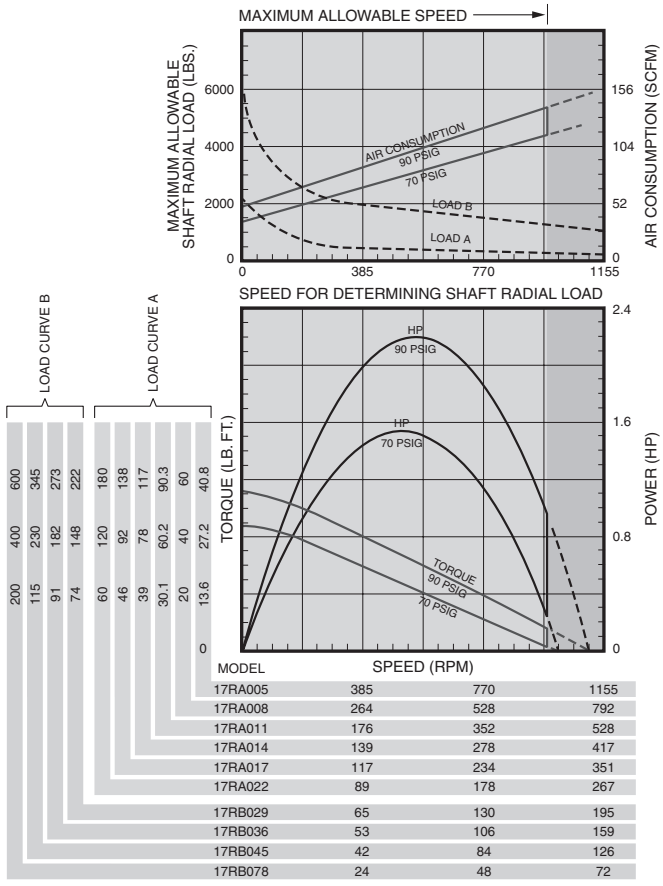

MODEL	SPEED (RPM)		
17RA005	385	770	1155
17RA008	264	528	792
17RA011	176	352	528
17RA014	139	278	417
17RA017	117	234	351
17RA022	89	178	267
17RB029	65	130	195
17RB036	53	106	159
17RB045	42	84	126
17RB078	24	48	72

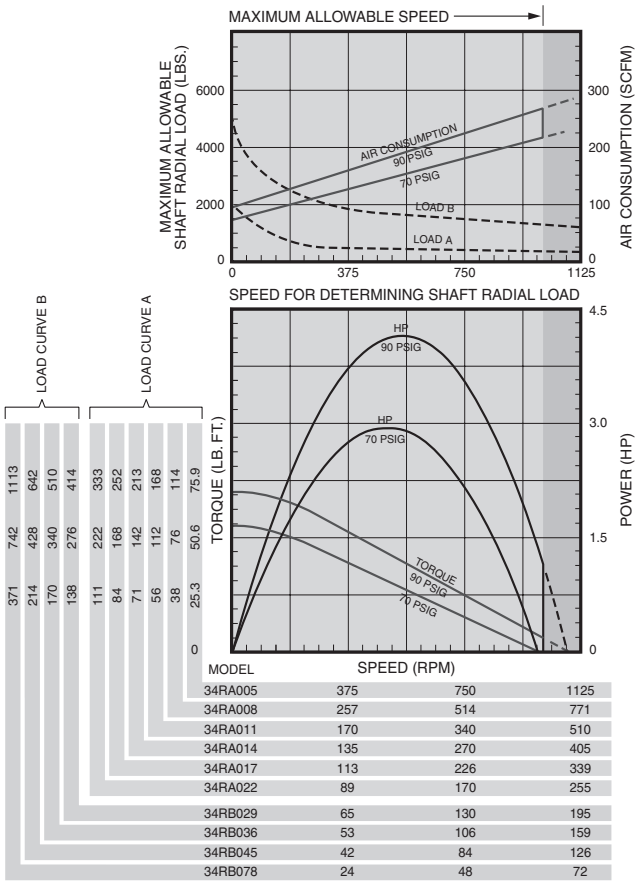

MODEL	SPEED (RPM)		
34RA005	375	750	1125
34RA008	257	514	771
34RA011	170	340	510
34RA014	135	270	405
34RA017	113	226	339
34RA022	89	170	255
34RB029	65	130	195
34RB036	53	106	159
34RB045	42	84	126
34RB078	24	48	72

SERIES 17RA, 17RB, 34RA, 34RB DIMENSIONS

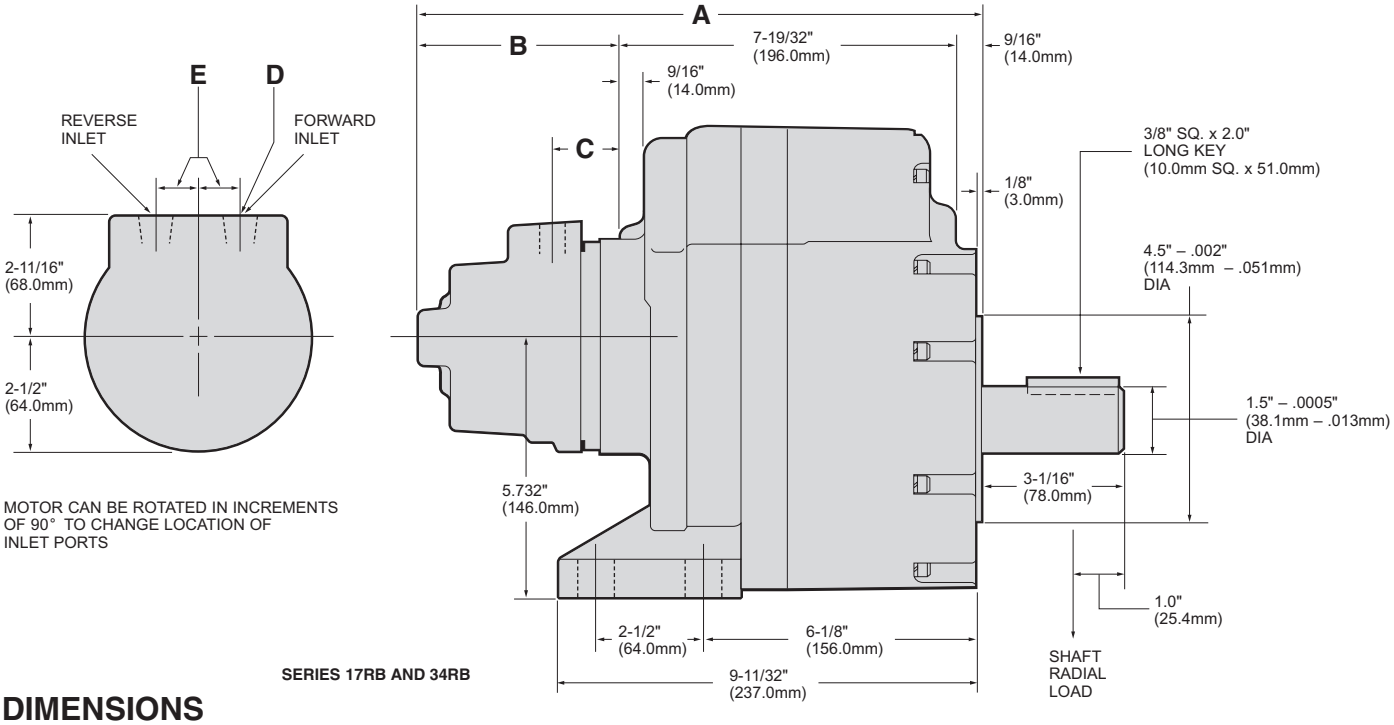

DIMENSIONS

SERIES	A		B		C		D	E	
	in.	mm	in.	mm	in.	mm	NPT	in.	mm
17RB	13 1/16	332	4 29/32	125	2 3/16	56	3/8"	7/8	22
34RB	14 13/16	376	6 21/32	169	2 9/32	58	1/2"	1 3/16	30

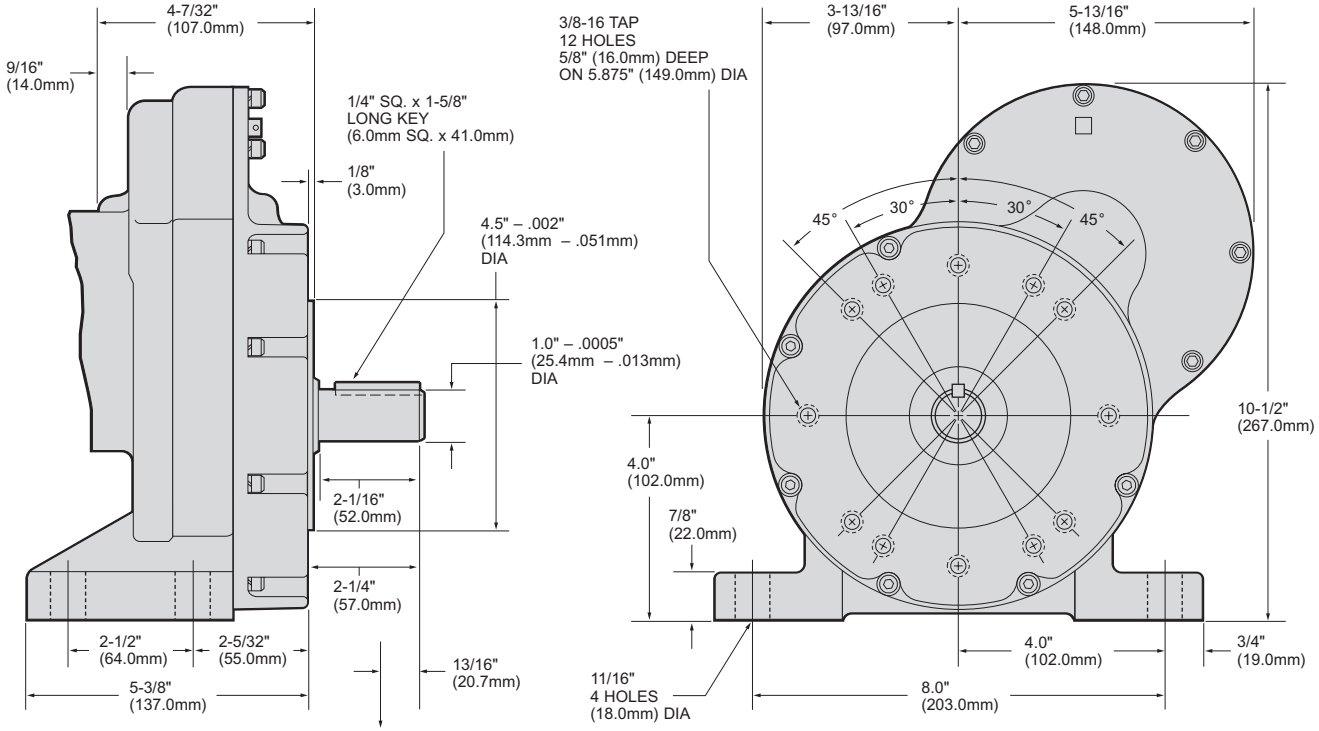

Series 48RA and 48RB Multi-Vane Air Motors

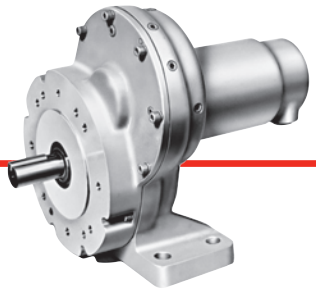

SPECIFICATIONS

Model	Max. Power		Speed at Max. Power	Free Speed▲	Starting Torque		Stall Torque		Air Consumption at Max. Power		Weight	
	hp	kw	rpm	rpm	lb.-ft.	Nm	lb.-ft.	Nm	scfm	m³/m	lb.	kg
Reversible												
48RA005	3.1	2.31	930	1690	26	35.3	35	47.5	95	2.69	44	20
48RA008	3.1	2.31	638	1160	38	51.5	51.5	69.8	95	2.69	44	20
48RA011	3.1	2.31	423	772	57	77.3	77.5	105	95	2.69	44	20
48RA014	3.1	2.31	332	612	72	97.6	98	133	95	2.69	44	20
48RA017	3.1	2.31	278	511	86	117	117	159	95	2.69	44	20
48RA022	3.1	2.31	213	390	113	153	154	209	95	2.69	44	20
48RB029	3	2.24	162	292	135	183	189	256	90	2.55	75	34
48RB036	3	2.24	131	236	167	227	234	317	90	2.55	75	34
48RB045	3	2.24	105	188	209	283	295	400	90	2.55	75	34
48RB078	3	2.24	60	108	364	494	513	696	90	2.55	75	34

▲ALL models must be operated with sufficient load to prevent speed from exceeding maximum allowable speed shown on performance curve.
Performance figures are at 90 psig (620 kPa) air pressure.

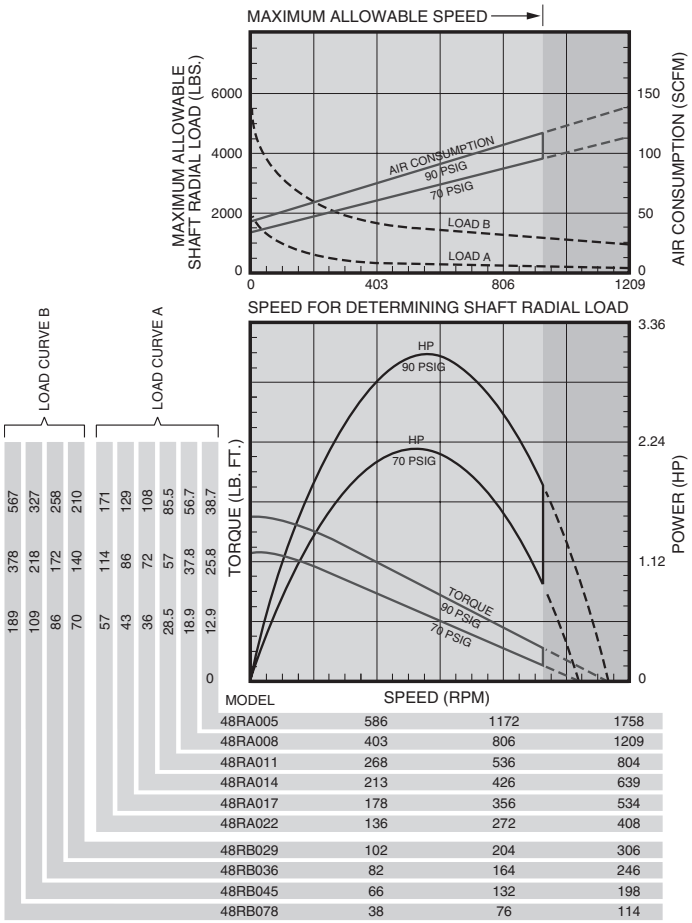

EQUIPMENT OPTIONS

Furnished with Cataloged Models	Standard Options
Side Inlet Backhead	R4840-102 Rear Inlet Backhead

SERIES 48RA AND 48RB DIMENSIONS

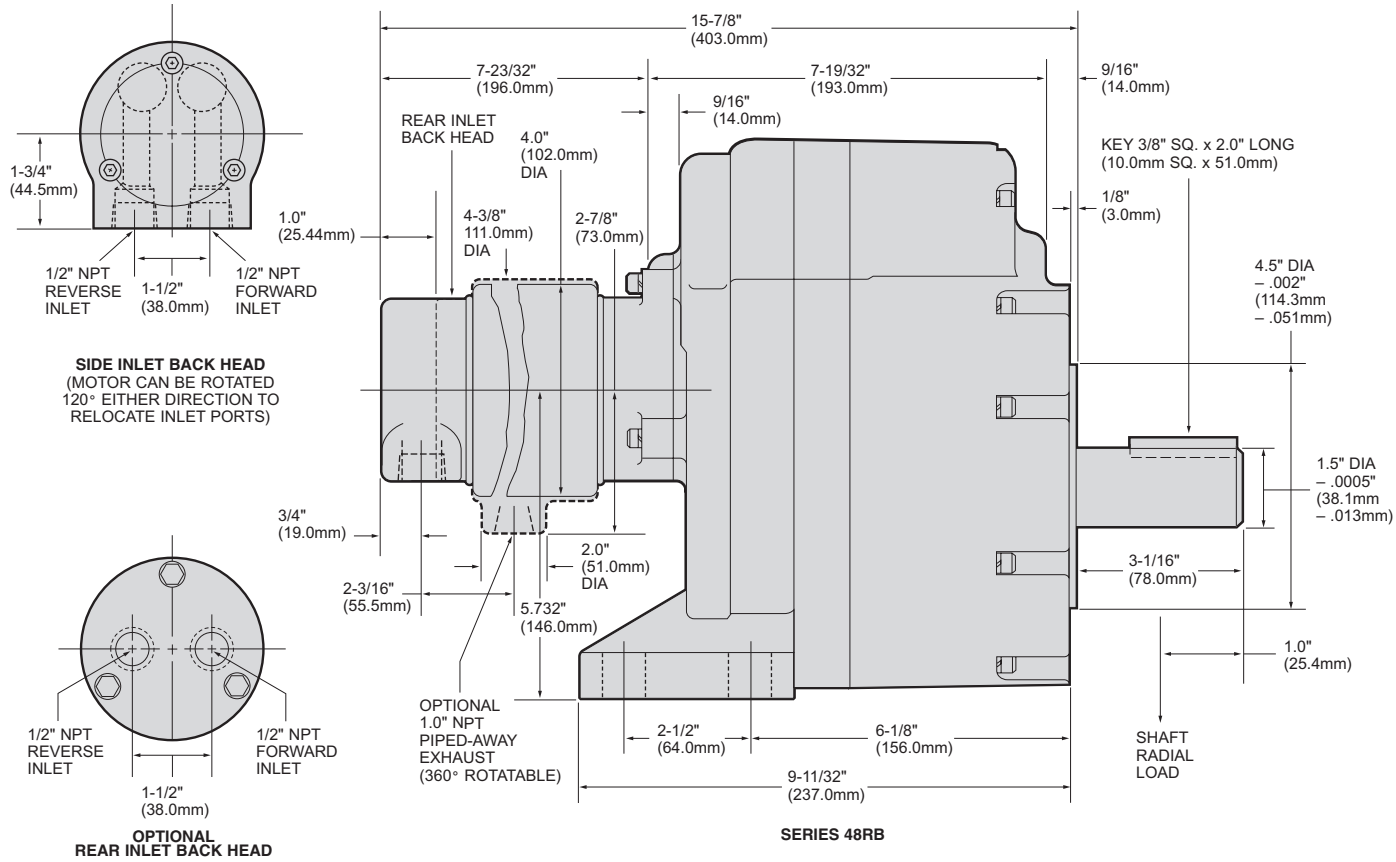

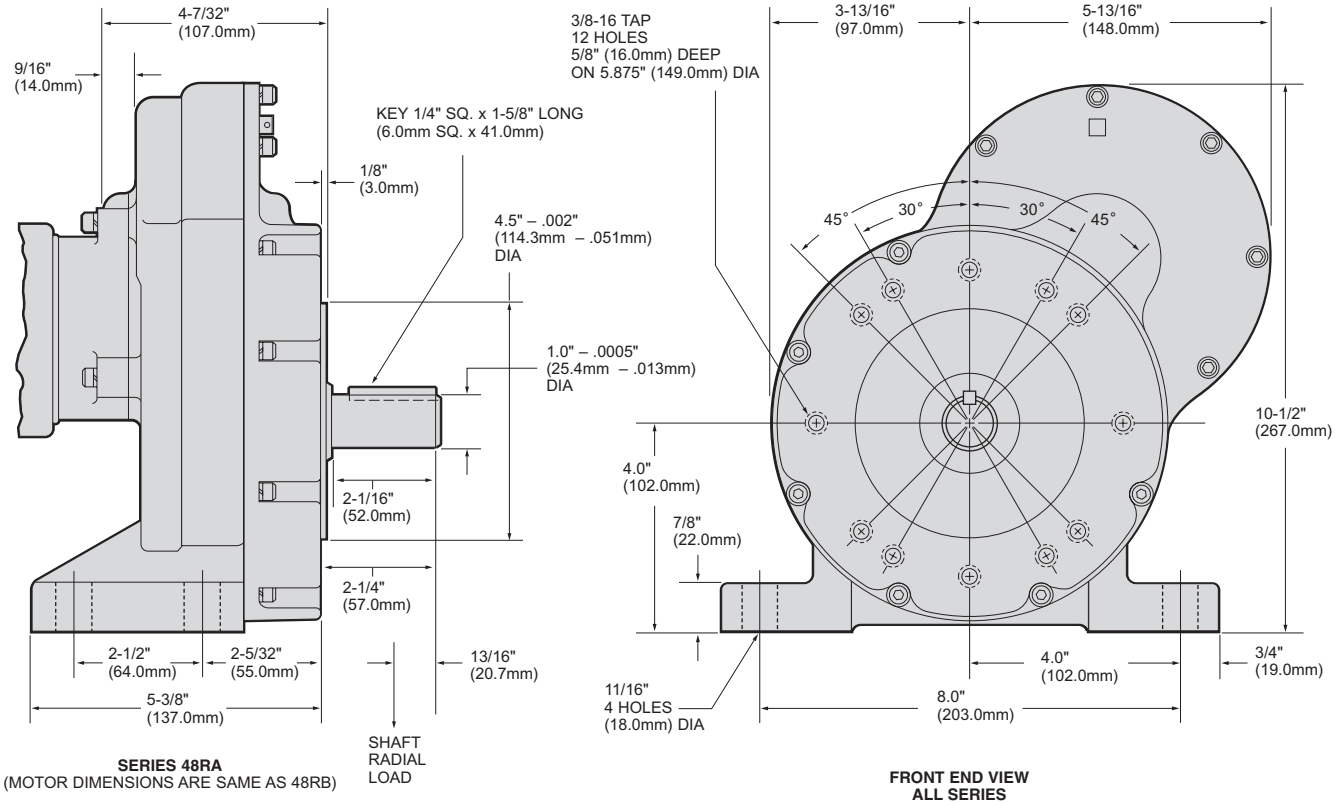

Series 92RA and 92RB Multi-Vane Air Motors

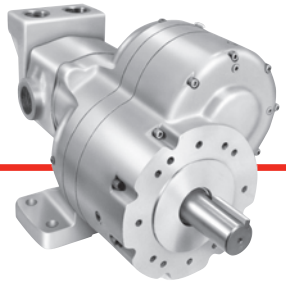

SPECIFICATIONS

Model	Max. Power		Speed at Max. Power	Free Speed▲	Starting Torque		Stall Torque		Air Consumption at Max. Power		Weight	
	hp	kw	rpm	rpm	lb.-ft.	Nm	lb.-ft.	Nm	scfm	m^3/m	lb.	kg
Reversible												
92RA005	8.15	6.08	910	1390	56	75.9	75	102	230	6.51	46	20.9
92RA008	8.15	6.08	620	1296	80	109	109	148	230	6.51	46	20.9
92RA011	8.15	6.08	415	852	120	163	164.5	223	230	6.51	46	20.9
92RA014	8.15	6.08	327	682	152	206	208	282	230	6.51	46	20.9
92RA017	8.15	6.08	274	571	180	244	248	336	230	6.51	46	20.9
92RA022	8.15	6.08	209	435	235	319	326	442	230	6.51	46	20.9
92RB029	7.9	5.89	160	327	280	380	402	545	225	6.37	78	35.4
92RB036	7.9	5.89	130	264	345	468	497	674	225	6.37	78	35.4
92RB045	7.9	5.89	103	210	440	597	626	849	225	6.37	78	35.4
92RB078	7.9	5.89	59	120	770	1044	1090	1478	225	6.37	78	35.4

▲ALL models must be operated with sufficient load to prevent speed from exceeding maximum allowable speed shown on performance curve.
Performance figures are at 90 psig (620 kPa) air pressure.

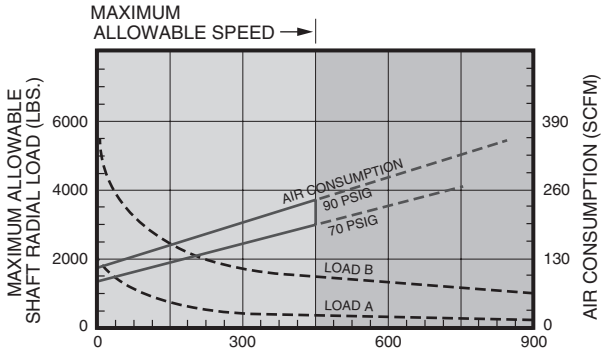

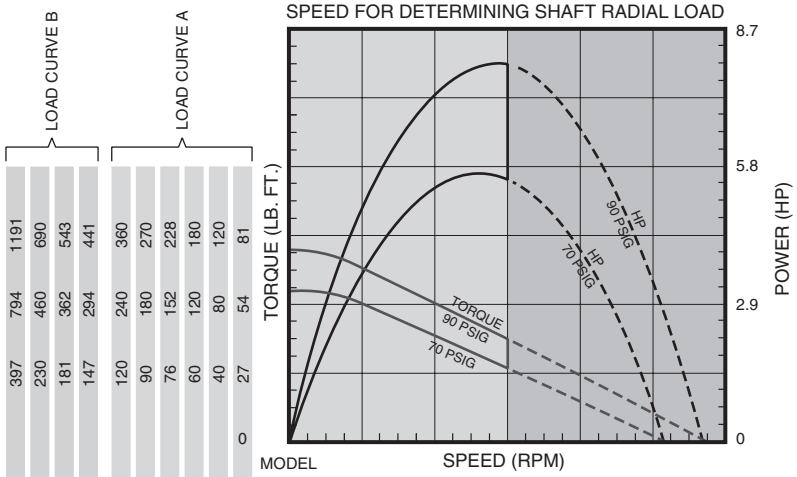

MODEL												
92RA005	656	1312	1968									
92RA008	450	900	1350									
92RA011	300	600	900									
92RA014	237	474	711									
92RA017	198	396	594									
92RA022	151	302	453									
92RB029	114	228	342	397	794	1191						
92RB036	92	184	276	230	460	690						
92RB045	73	146	219	181	362	543						
92RB078	42	84	126	147	294	441						
				120	240	360						
				90	180	270						
				76	152	228						
				60	120	180						
				40	80	120						
				27	54	81						
				0								

SERIES 92RA AND 92RB DIMENSIONS

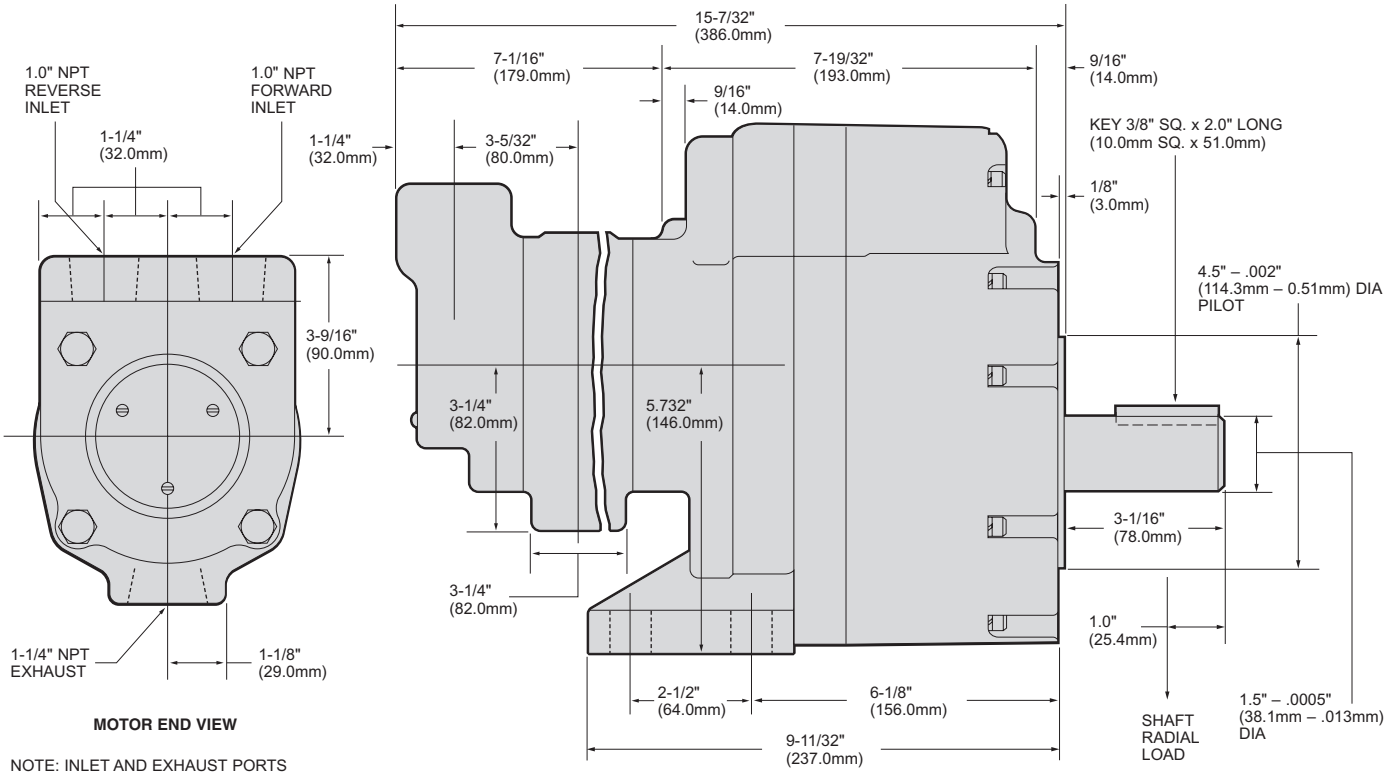

MOTOR END VIEW

NOTE: INLET AND EXHAUST PORTS CAN BE RELOCATED RELATIVE TO EACH OTHER IN INCREMENTS OF 90°

SERIES 92RB

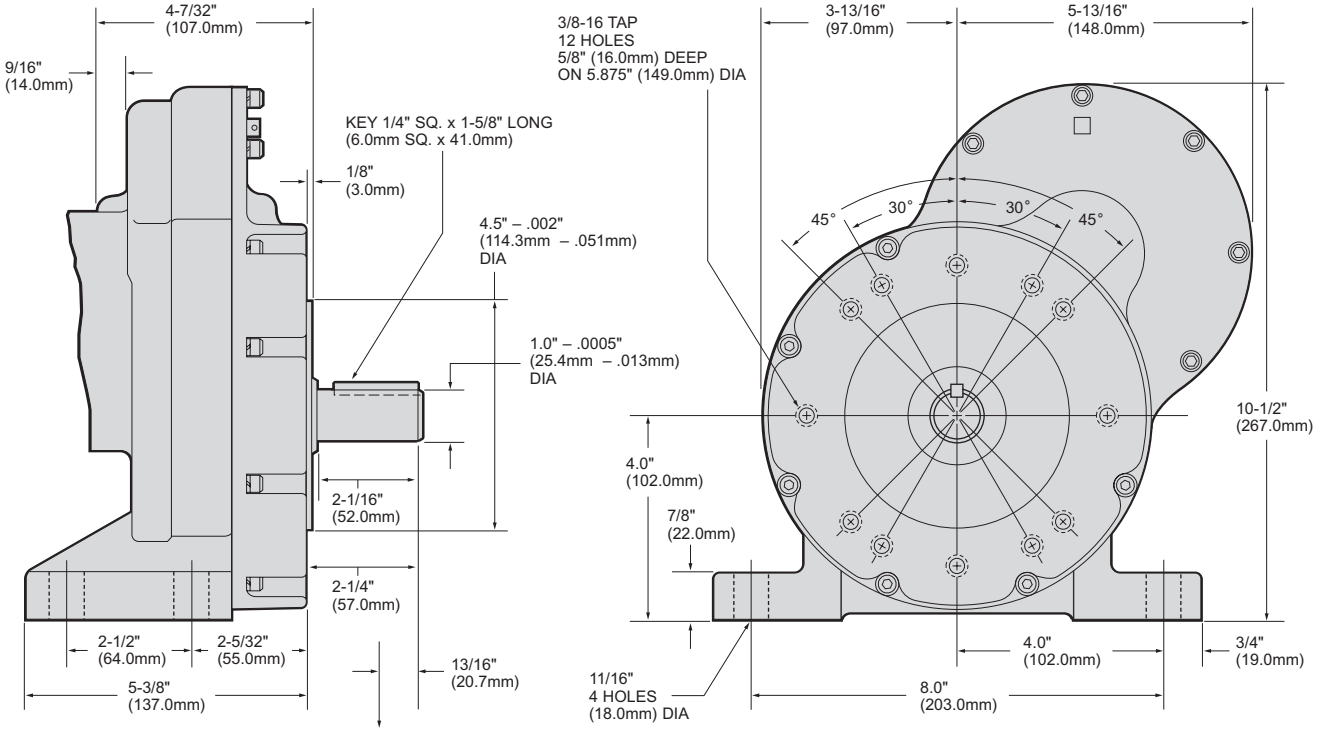

SERIES 92RA
(MOTOR DIMENSIONS ARE SAME AS 92RB)

FRONT END VIEW
ALL SERIES

Series 92RM and 992RM Multi-Vane Air Motors

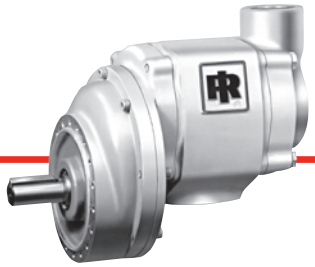

SPECIFICATIONS

Model	Max. Power		Speed at Max. Power	Free Speed▲	Starting Torque		Stall Torque		Air Consumption at Max. Power		Weight	
	hp	kw	rpm	rpm	lb.-ft.	Nm	lb.-ft.	Nm	scfm	m^3/m	lb.	kg
Non-Reversible												
92RM1 92RM2	9.9 9.9	7.38 7.38	2095 2095	3980 3980	33 33	44.7 44.7	45 45	61 61	240 240	6.79 6.79	24¼ 24¼	11 11
Reversible												
992RM1	8.15	6.08	1730	3600	28.7	38.9	39	52.9	230	6.51	25¼	11.3

▲ALL models must be operated with sufficient load to prevent speed from exceeding maximum allowable speed shown on performance curve.
Performance figures are at 90 psig (620 kPa) air pressure.

Direction of rotation of Model 92RM1 is clockwise, and of Model 92RM2 is counter clockwise when facing the shaft end of the motor.

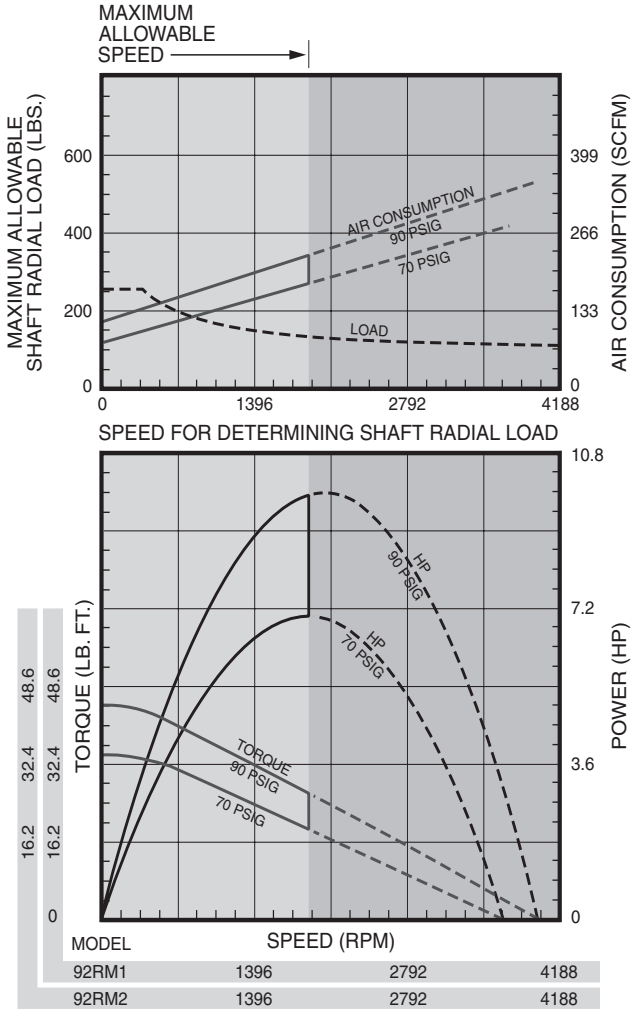

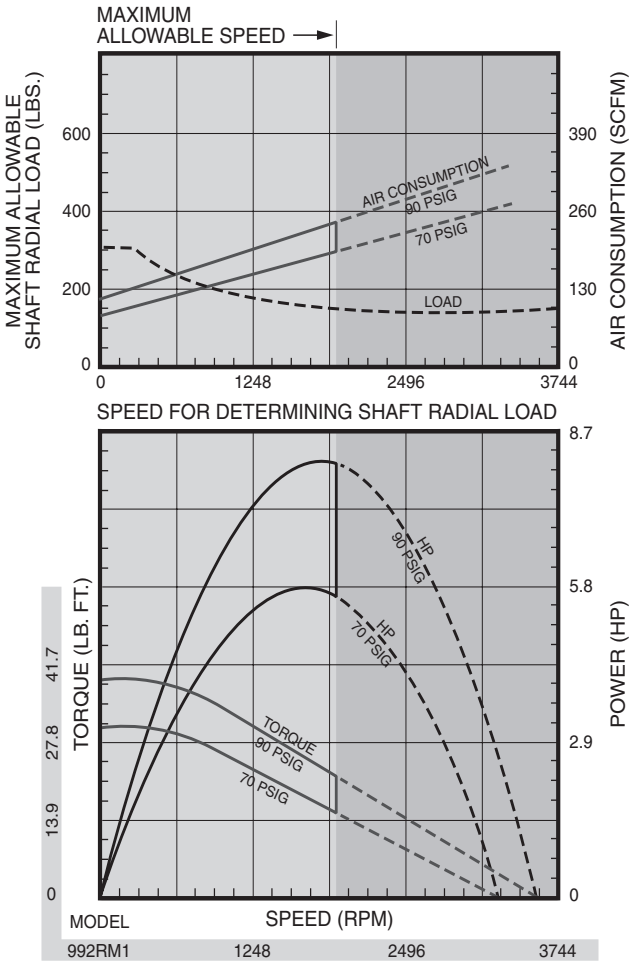

SERIES 92RM AND 992RM DIMENSIONS

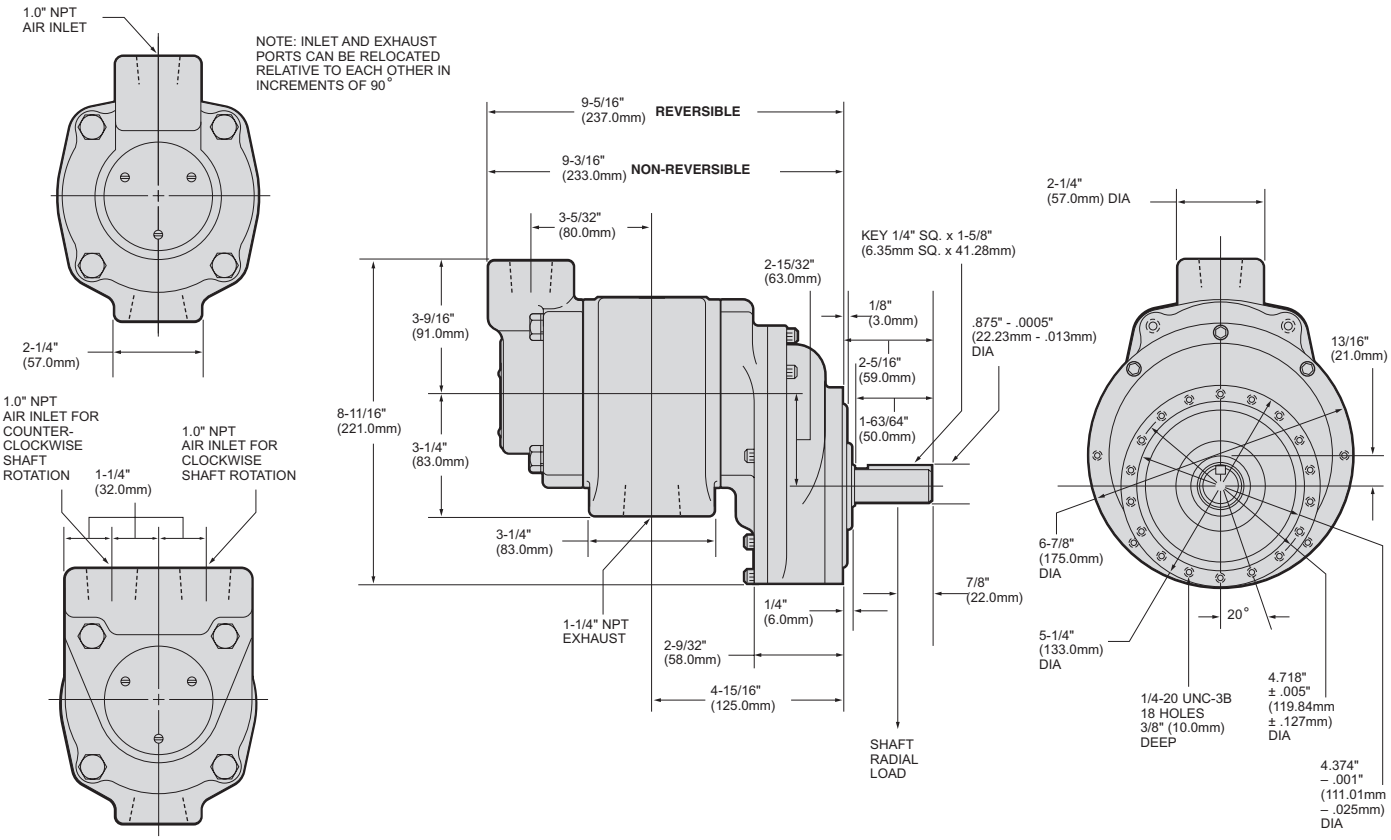

Series MVA and MOVO Multi-Vane Air Motors

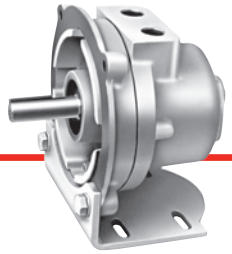

SPECIFICATIONS

Model*	Max. Power		Speed at Max. Power	Free Speed▲	Starting Torque		Stall Torque		Air Consumption at Max. Power		Weight	
	hp	kw	rpm	rpm	lb.-ft.	Nm	lb.-ft.	Nm	scfm	m³/m	lb.	kg
Reversible												
MVA017A	1.93	1.44	2800	5450	4.5	6.1	7	9.5	76	2.15	12½	5.67
MVA017B	1.93	1.44	2800	5450	4.5	6.1	7	9.5	76	2.15	12½	5.67
MVA034A	4.15	3.09	3000	6250	8.3	11.3	12.8	17.4	181	5.12	16½	7.48
MVA034B	4.15	3.09	3000	6250	8.3	11.3	12.8	17.4	181	5.12	16½	7.48
MOV005AA	.75	.56	3300	6800	1.65	2.2	2.2	2.98	30	.84	6½	2.95
MOV075AA	10.5	7.8	2600	5600	22.5	30.5	30	40.7	260	7.36	64	29

▲ALL models must be operated with sufficient load to prevent speed from exceeding maximum allowable speed shown on performance curve.
Performance figures are at 90 psig (620 kPa) air pressure.

* "A" suffix denotes foot mount model, "B" suffix denotes flange mount models.

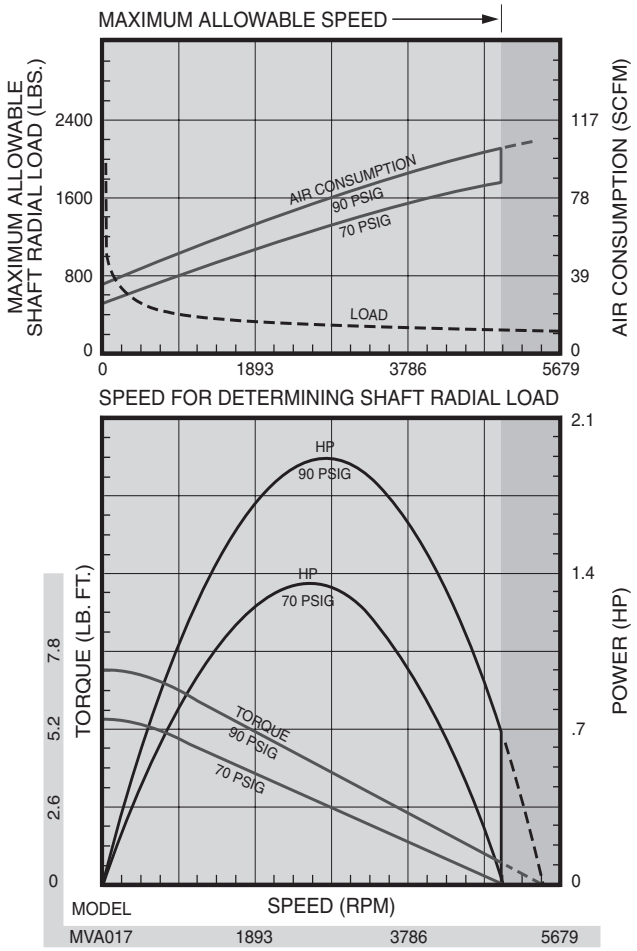

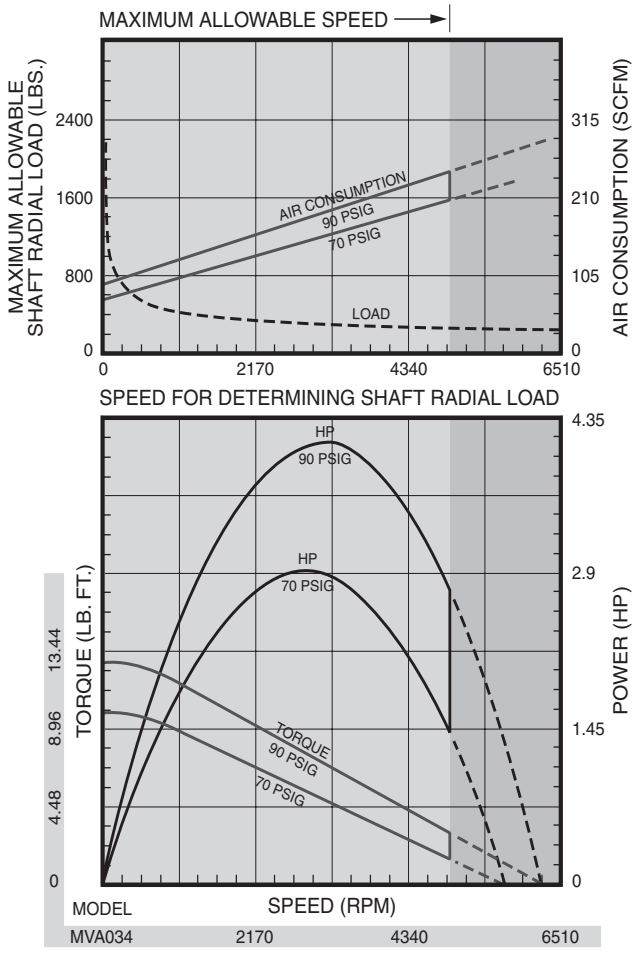

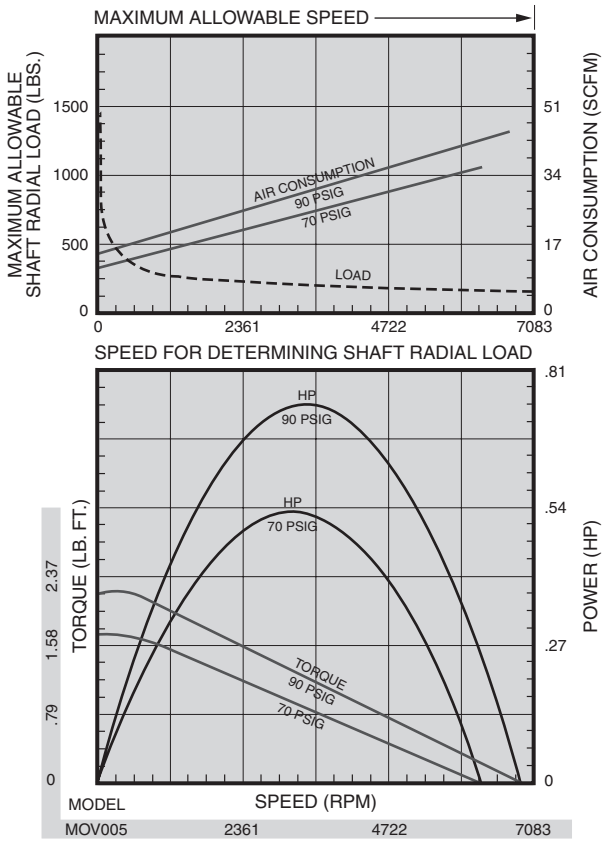

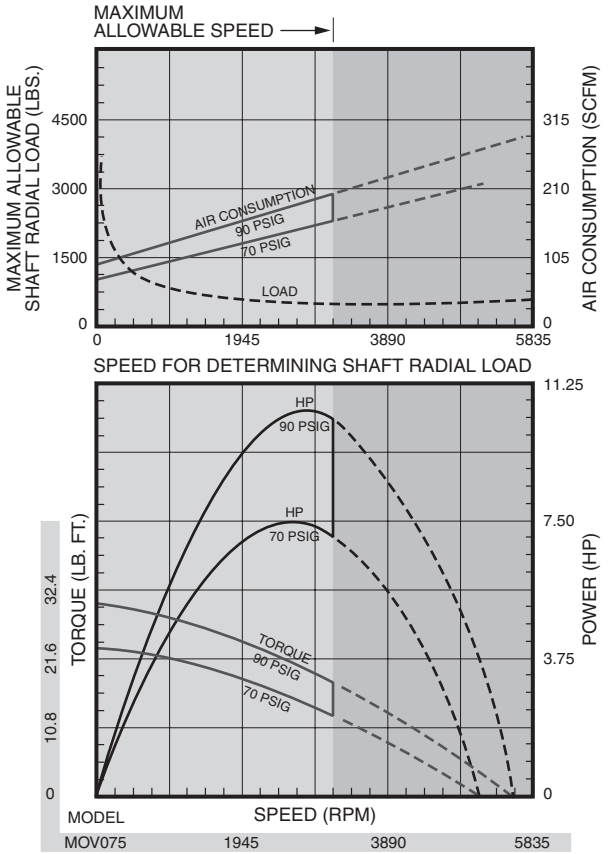

SERIES MVA DIMENSIONS

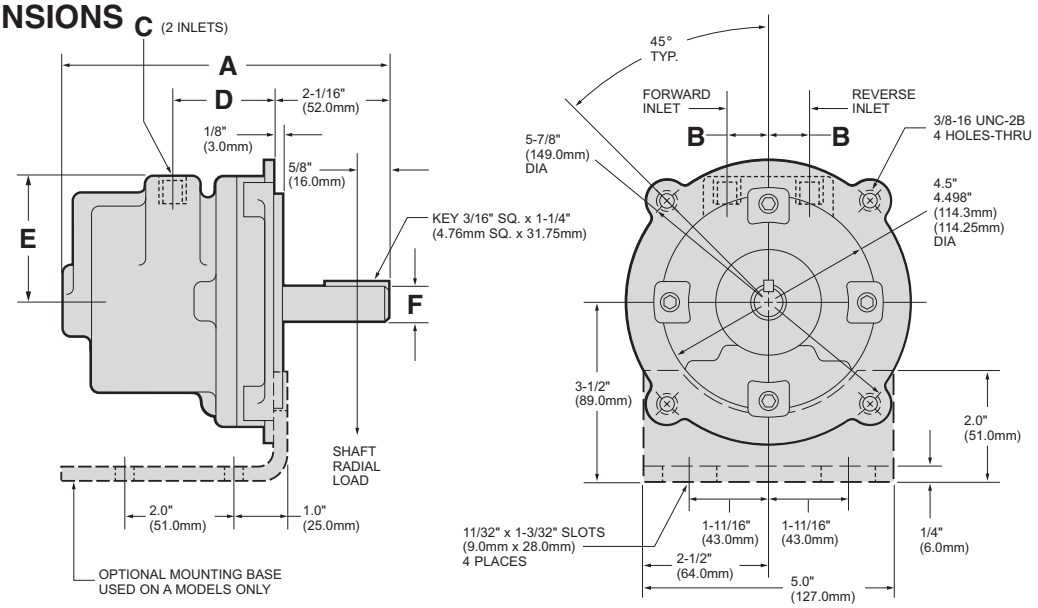

DIMENSIONS

SERIES	A		B		C	D		E		F DIA.	
	in.	mm	in.	mm	NPT	in.	mm	in.	mm	in.	mm
MVA017	6 11/16	170	7/8	22	3/8"	1 7/8	48	2 1/2	64	.6250 .6245	15.88 15.86
MVA034	8 7/16	214	1 3/16	30	1/2"	2	51	2 5/8	67	.8750 .8745	22.23 22.21

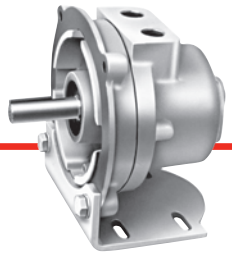

MODEL MOV005AA DIMENSIONS

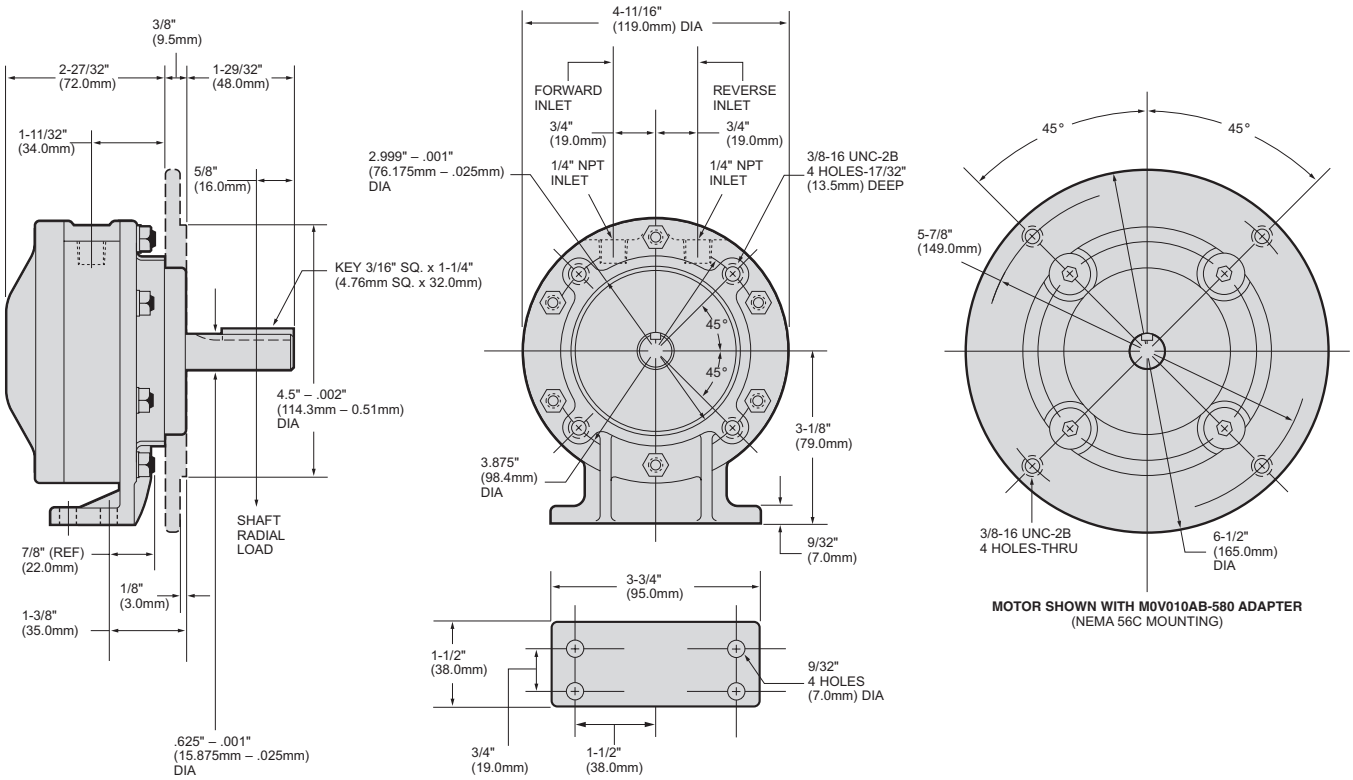

MOTOR SHOWN WITH M0V010AB-580 ADAPTER
(NEMA 56C MOUNTING)

MODEL MOV075AA DIMENSIONS

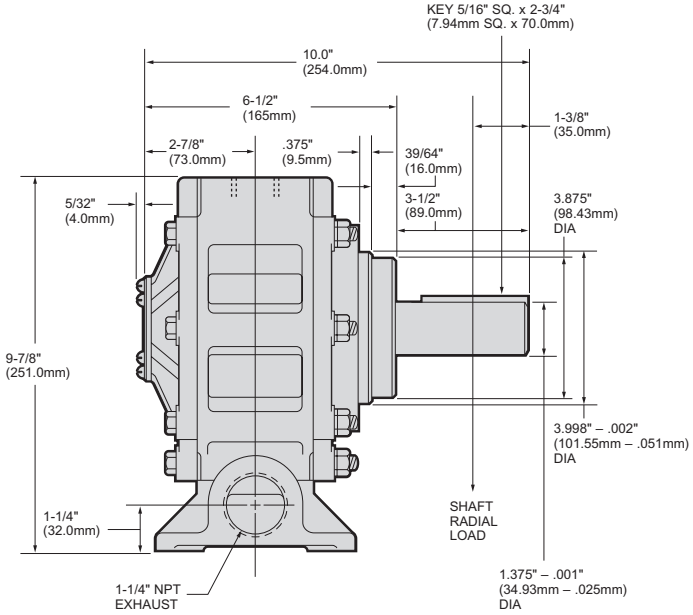

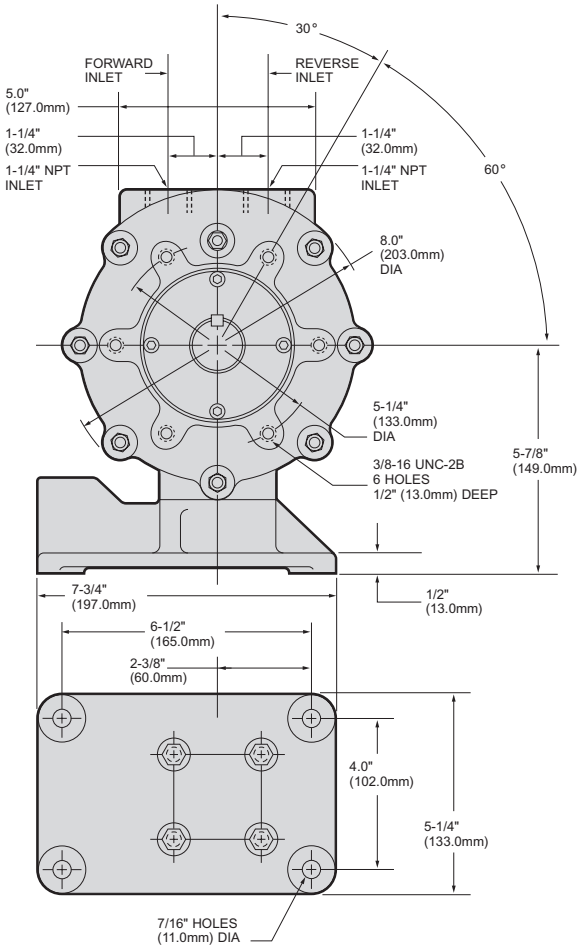

EQUIPMENT OPTIONS

Models	Furnished with Cataloged Models	Standard Options
MVA017A	*Foot Mounting	
MVA017B	NEMA C Face 56C Frame Size	MVA008-K4 Mounting Foot Kit
MVA034A	**Foot Mounting	MOV010AA-674 Muffler
MVA034B	NEMA C Face 182C Frame Size	MVA008-K4 Mounting Foot Kit MOV010AA-674 Muffler
MOV005AA	Foot/4 Hole Face Mounting	MRV015-AC 980 Muffler
MOV075AA	Foot/6 Hole Face Mounting	150BM-A674 Muffler

* Removal of Foot Mounting results in Motor having NEMA C Face Mounting, 56C Frame Size.
** Removal of Foot Mounting results in Motor having NEMA C Face Mounting, 182C Frame Size.

SPECIFICATIONS

Series	Max. Power		Speed at Max. Power	Free Speed▲	Starting Torque		Stall Torque		Air Consumption at Max. Power		Weight	
	hp	kw	rpm	rpm	lb.-ft.	Nm	lb.-ft.	Nm	scfm	m³/m	lb.	kg
Reversible												
MRV003	0.33	0.25	7600	15,200	0.29	0.39	0.38	0.52	17	0.5	1½	0.6
MRV005	0.60	0.37	6000	12,500	0.45	0.61	0.60	0.81	42	1.2	1¾	0.8
MRV009	0.88	0.66	3000	8,070	1.7	2.3	2.3	3.1	48	1.4	7½	3.4
MRV015	1.5	1.1	3000	7900	2.6	3.5	4.1	5.6	67	1.9	8¼	2.4
MRV040	3.6	2.7	3000	7900	5.3	7.2	8.7	11.8	120	3.4	16¼	7.4
MRV050	4.8	3.6	2500	7000	10.0	13.6	14.0	19.0	152	4.3	22½	10.2

▲ ALL models must be operated with sufficient load to prevent speed from exceeding maximum allowable speed shown on performance curve.
Performance figures are at 90 psig (620 kPa) air pressure.

MODEL DESIGNATION BREAKOUT

MRV → MRV Series Air Motors

003 → Nominal Series Power

A → Shaft/Interface

L → Rotation

Nominal Series Power –
- 003 => 1/3 Horsepower
- 005 => 1/2 Horsepower
- 009 => 3/4 Horsepower
- 015 => 1-1/2 Horsepower
- 040 => 4 Horsepower
- 050 => 5 Horsepower

Shaft/Interface –
- A => Round Shaft with Square Key (Round Shaft on MRV003 Series)
- B => Round Shaft with Woodruff Key (#3)
- C => Round Shaft with Flat on Shaft

Rotation
- L => Left Hand Bias (CCW)
- R => Right Hand Bias (CW)
- None => Reversible

EQUIPMENT OPTIONS

Series	Furnished with Cataloged Models	Optional at Extra Price
MRV003	3 Hole Face Mounting MRV003A-AF350 Muffler	MRV003A-AG587 Mounting Foot
MRV005	3 Hole Face Mounting MRV003A-AF350 Muffler	MRV003A-AG587 Mounting Foot
MRV009	3 Hole Face Mounting MRV015A-AC980 Muffler	MRV015B-AH636 Mounting Foot MRV009B-AH635 Mounting Flange
MRV015	3 Hole Face Mounting MRV015A-AC980 Muffler	MRV015A-AH634 Mounting Foot MRV015A-AH633 NEMA 56C Mounting Flange
MRV040	3 Hole Face Mounting MRV040A-AC990 Muffler	MRV015A-AH634 Mounting Foot MRV015A-AH633 NEMA 56C Mounting Flange
MRV050	3 Hole Face Mounting MRV040A-AC990	MRV050A-AH640 Mounting Foot MRV050A-AH641 NEMA 182C, 184C, 143TC and 145TC Mounting Flange

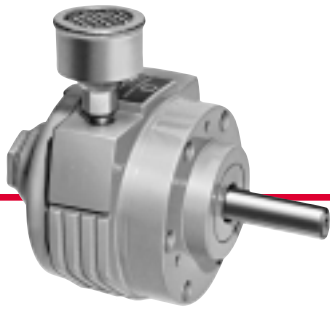

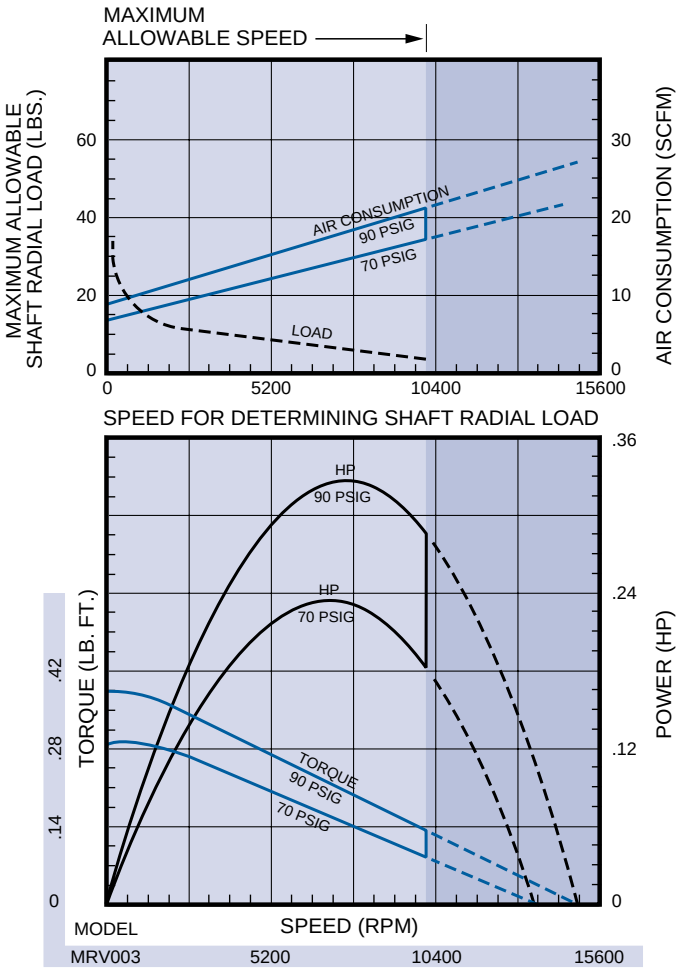
MAXIMUM
ALLOWABLE SPEED
MAXIMUM ALLOWABLE
SHAFT RADIAL LOAD (LBS.)
AIR CONSUMPTION (SCFM)
AIR CONSUMPTION
90 PSIG
70 PSIG
LOAD
0
20
40
60
0
10
20
30
0
5200
10400
15600
SPEED FOR DETERMINING SHAFT RADIAL LOAD
HP
90 PSIG
HP
70 PSIG
TORQUE
90 PSIG
70 PSIG
TORQUE (LB. FT.)
POWER (HP)
0
.14
.28
.42
0
.12
.24
.36
MODEL
SPEED (RPM)
MRV003
5200
10400
15600

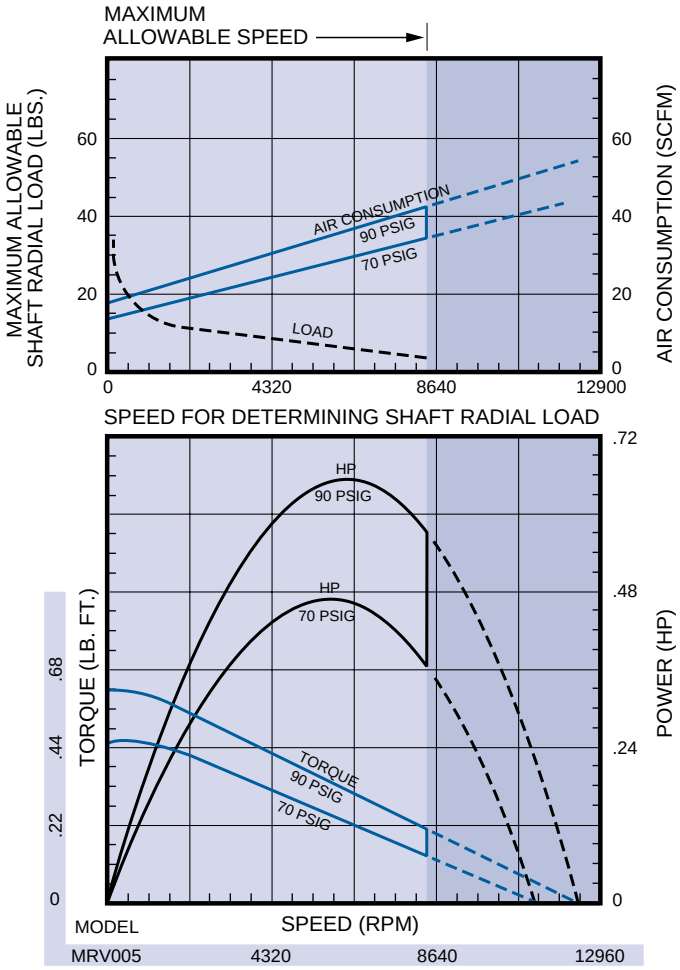
MAXIMUM
ALLOWABLE SPEED
MAXIMUM ALLOWABLE
SHAFT RADIAL LOAD (LBS.)
AIR CONSUMPTION (SCFM)
AIR CONSUMPTION
90 PSIG
70 PSIG
LOAD
0
20
40
60
0
20
40
60
0
4320
8640
12900
SPEED FOR DETERMINING SHAFT RADIAL LOAD
HP
90 PSIG
HP
70 PSIG
TORQUE
90 PSIG
70 PSIG
TORQUE (LB. FT.)
POWER (HP)
0
.22
.44
.68
0
.24
.48
.72
MODEL
SPEED (RPM)
MRV005
4320
8640
12960

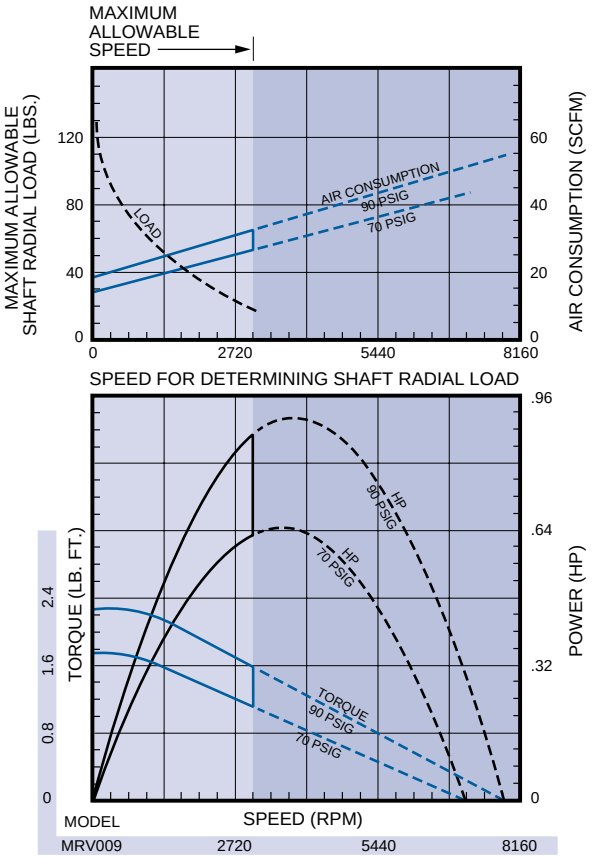
MAXIMUM ALLOWABLE SPEED
MAXIMUM ALLOWABLE SHAFT RADIAL LOAD (LBS.)
AIR CONSUMPTION (SCFM)
LOAD
AIR CONSUMPTION 90 PSIG
70 PSIG
0 2720 5440 8160
SPEED FOR DETERMINING SHAFT RADIAL LOAD
TORQUE (LB. FT.)
POWER (HP)
HP 90 PSIG
HP 70 PSIG
TORQUE 90 PSIG
70 PSIG
MODEL
SPEED (RPM)
MRV009 2720 5440 8160

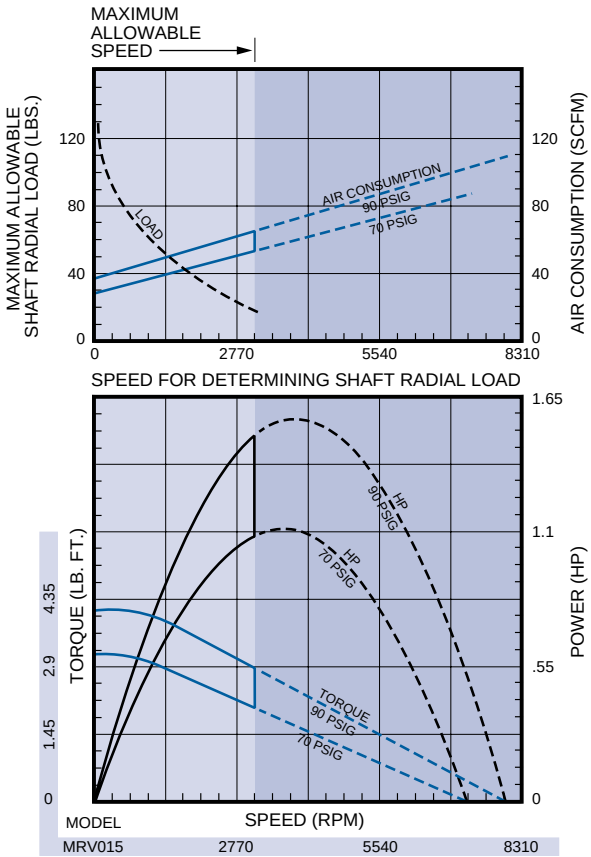
MAXIMUM ALLOWABLE SPEED
MAXIMUM ALLOWABLE SHAFT RADIAL LOAD (LBS.)
AIR CONSUMPTION (SCFM)
LOAD
AIR CONSUMPTION 90 PSIG
70 PSIG
0 2770 5540 8310
SPEED FOR DETERMINING SHAFT RADIAL LOAD
TORQUE (LB. FT.)
POWER (HP)
HP 90 PSIG
HP 70 PSIG
TORQUE 90 PSIG
70 PSIG
MODEL
SPEED (RPM)
MRV015 2770 5540 8310

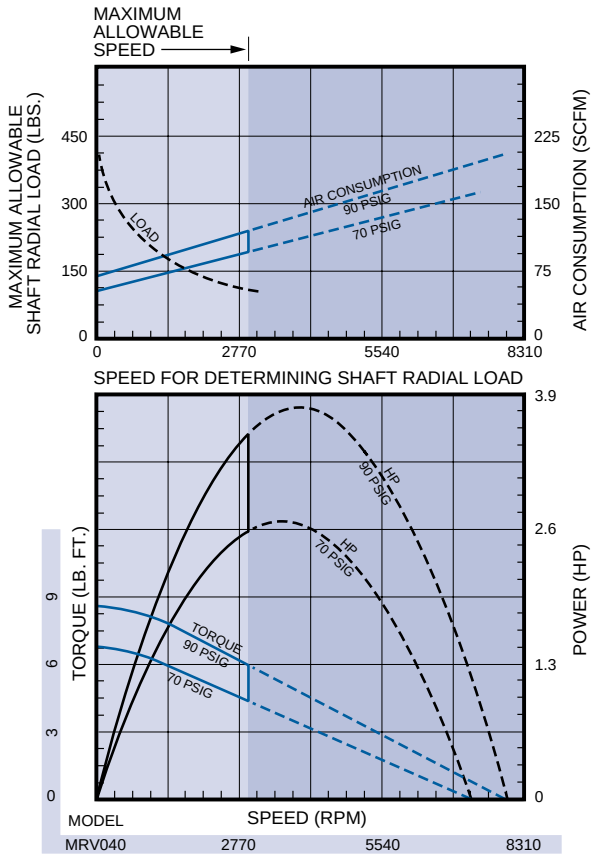
MAXIMUM ALLOWABLE SPEED
MAXIMUM ALLOWABLE SHAFT RADIAL LOAD (LBS.)
AIR CONSUMPTION (SCFM)
LOAD
AIR CONSUMPTION 90 PSIG
70 PSIG
0 2770 5540 8310
SPEED FOR DETERMINING SHAFT RADIAL LOAD
TORQUE (LB. FT.)
POWER (HP)
HP 90 PSIG
HP 70 PSIG
TORQUE 90 PSIG
70 PSIG
MODEL
SPEED (RPM)
MRV040 2770 5540 8310

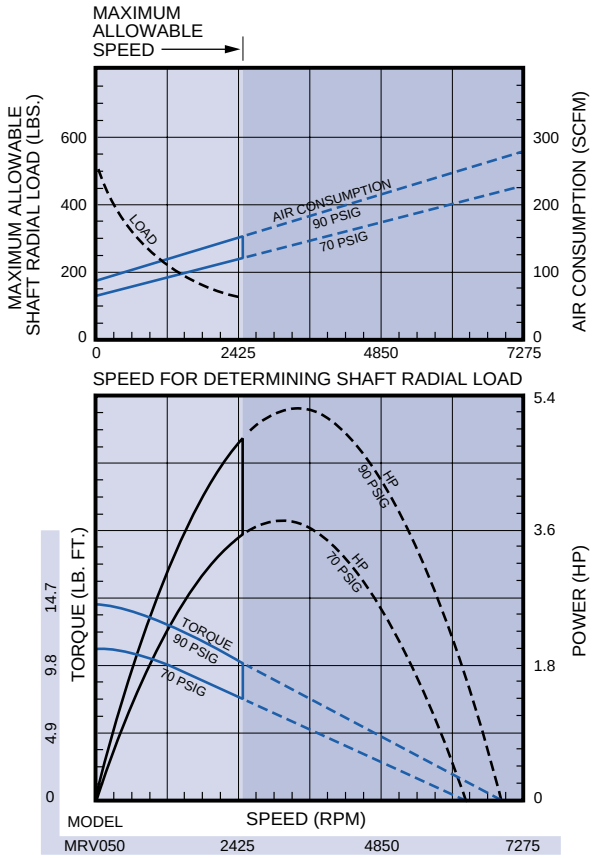
MAXIMUM ALLOWABLE SPEED
MAXIMUM ALLOWABLE SHAFT RADIAL LOAD (LBS.)
AIR CONSUMPTION (SCFM)
LOAD
AIR CONSUMPTION 90 PSIG
70 PSIG
0 2425 4850 7275
SPEED FOR DETERMINING SHAFT RADIAL LOAD
TORQUE (LB. FT.)
POWER (HP)
HP 90 PSIG
HP 70 PSIG
TORQUE 90 PSIG
70 PSIG
MODEL
SPEED (RPM)
MRV050 2425 4850 7275

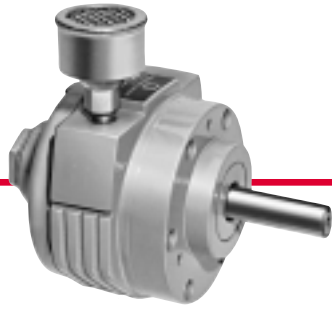

SERIES MRV003 DIMENSIONS

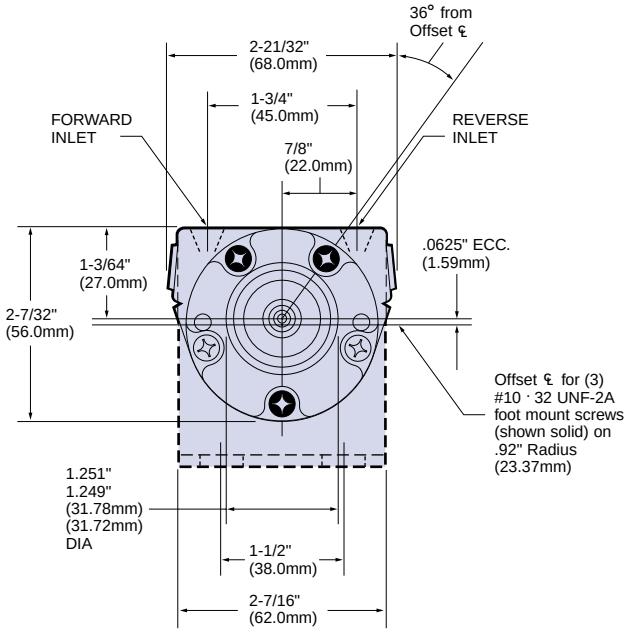

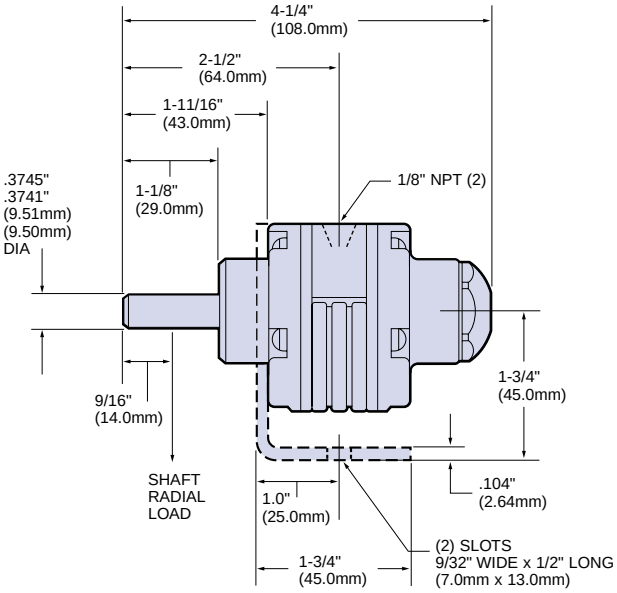

SERIES MRV005 DIMENSIONS

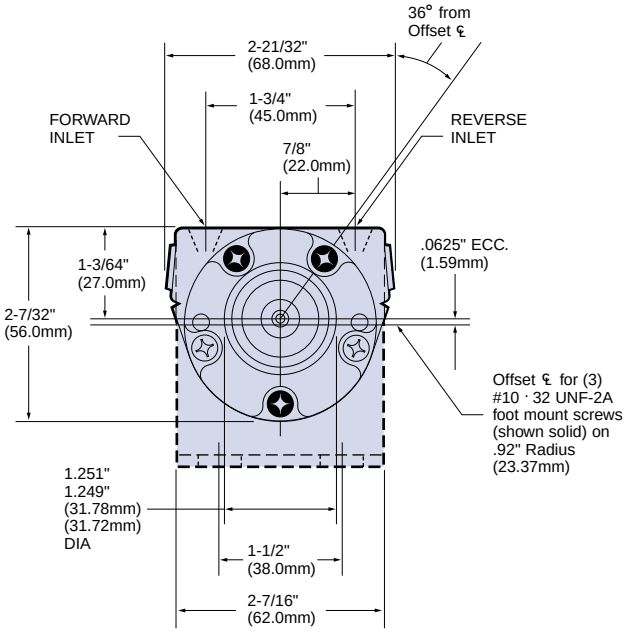

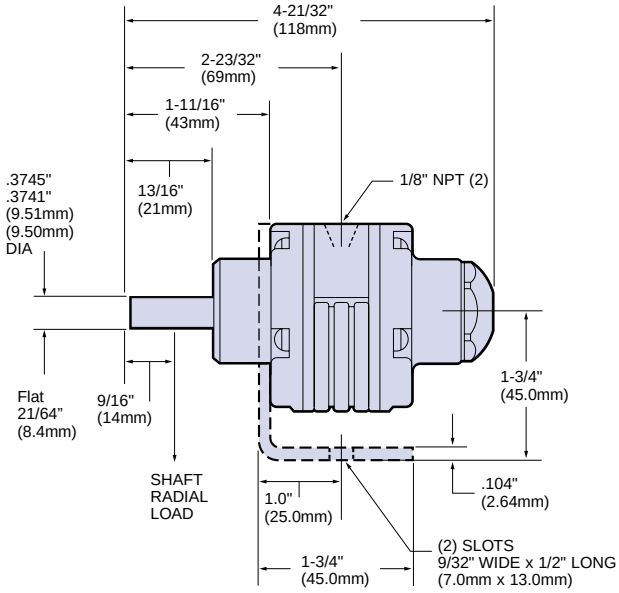

SERIES MRV009 DIMENSIONS

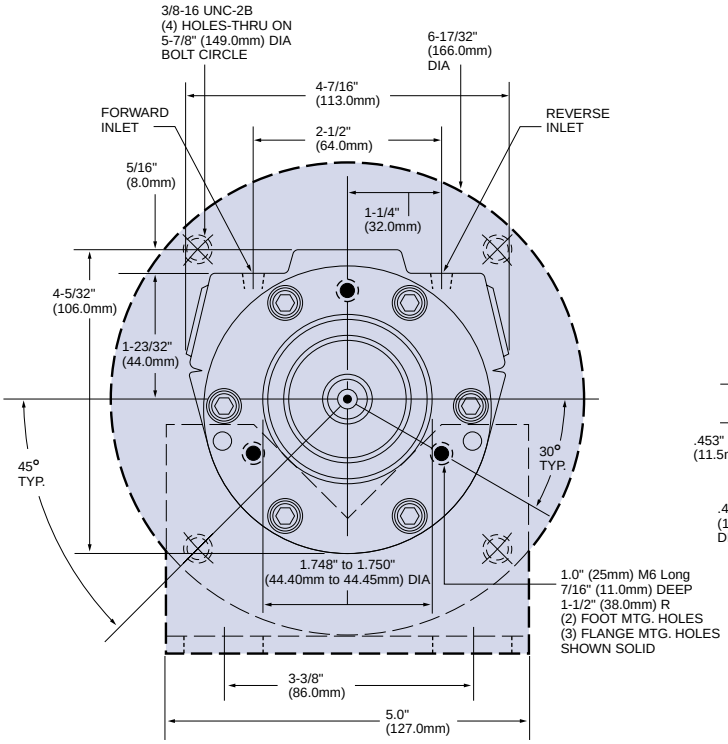

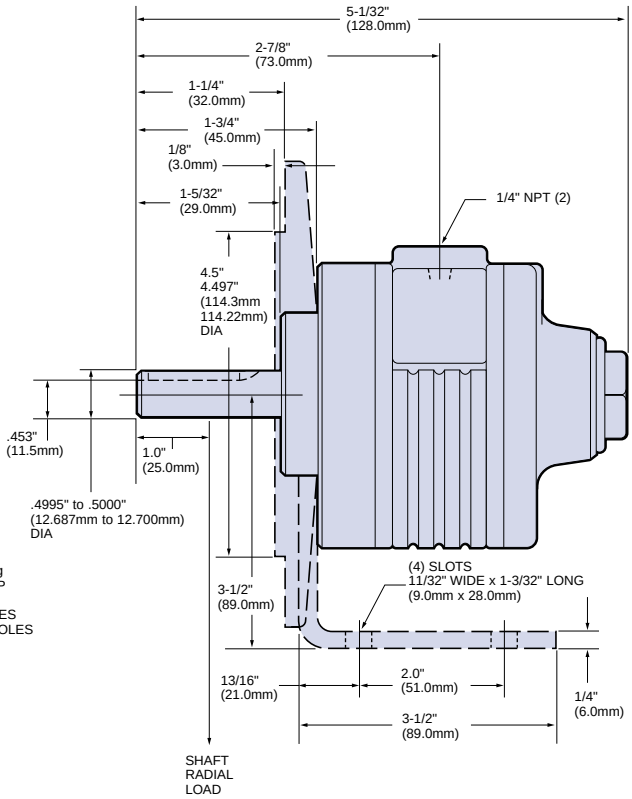

SERIES MRV015 DIMENSIONS

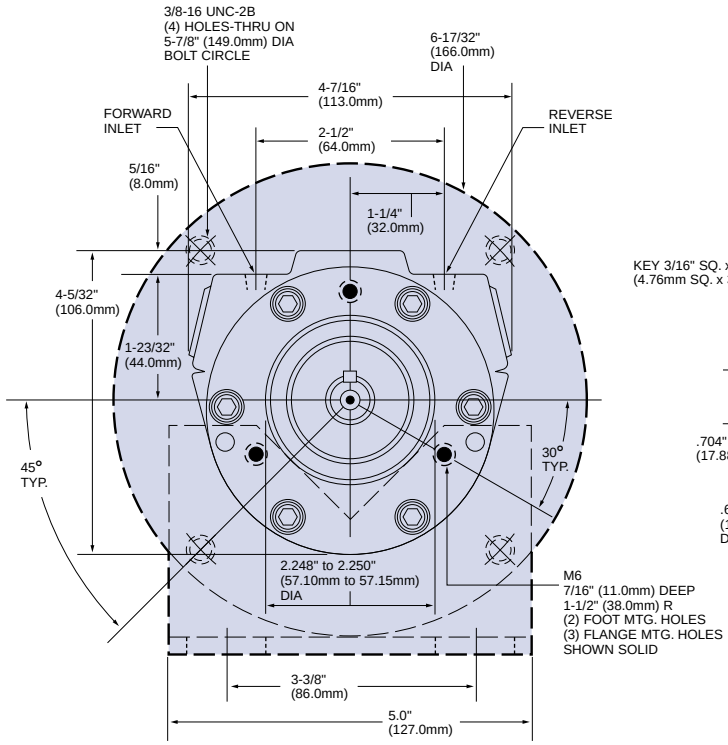

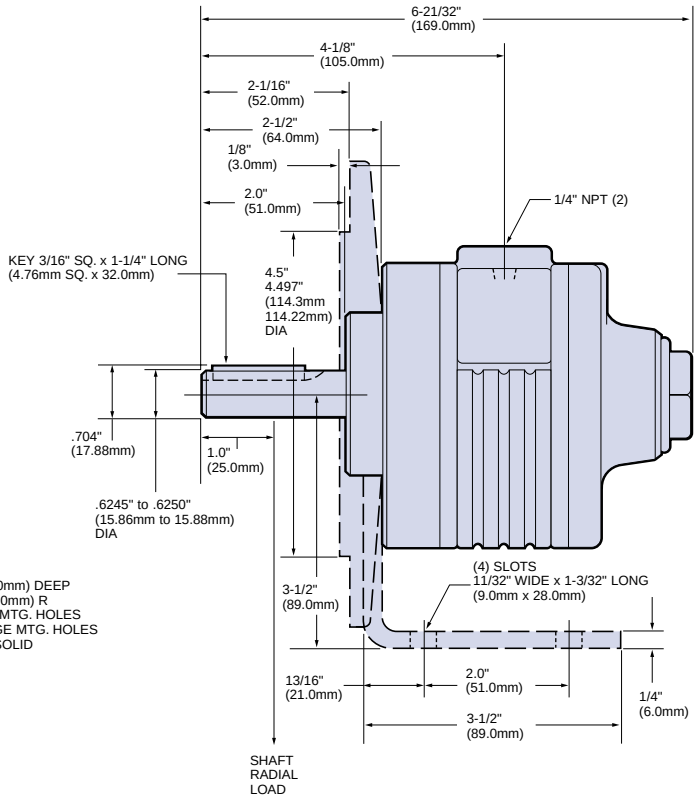

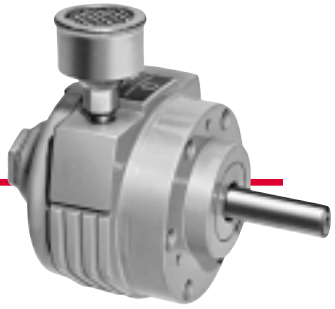

SERIES MRV040 DIMENSIONS

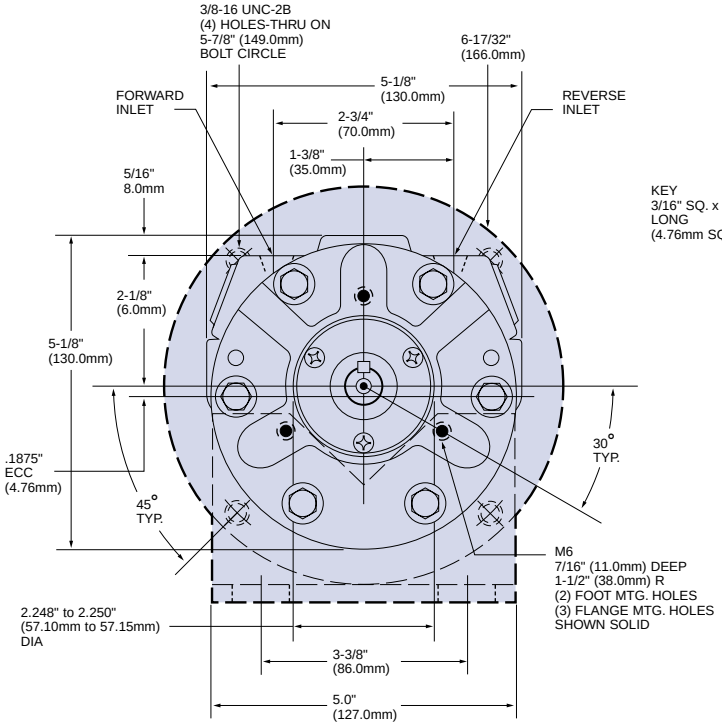

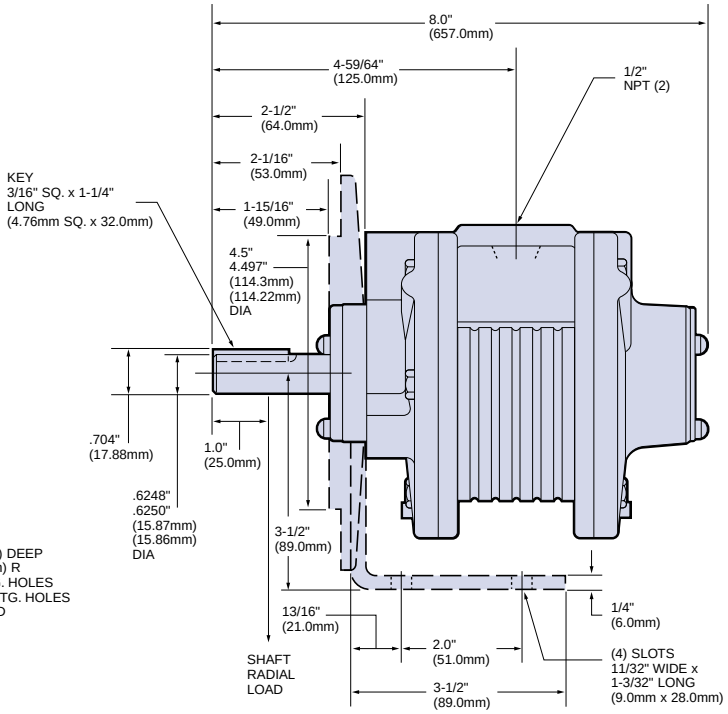

SERIES MRV050 DIMENSIONS

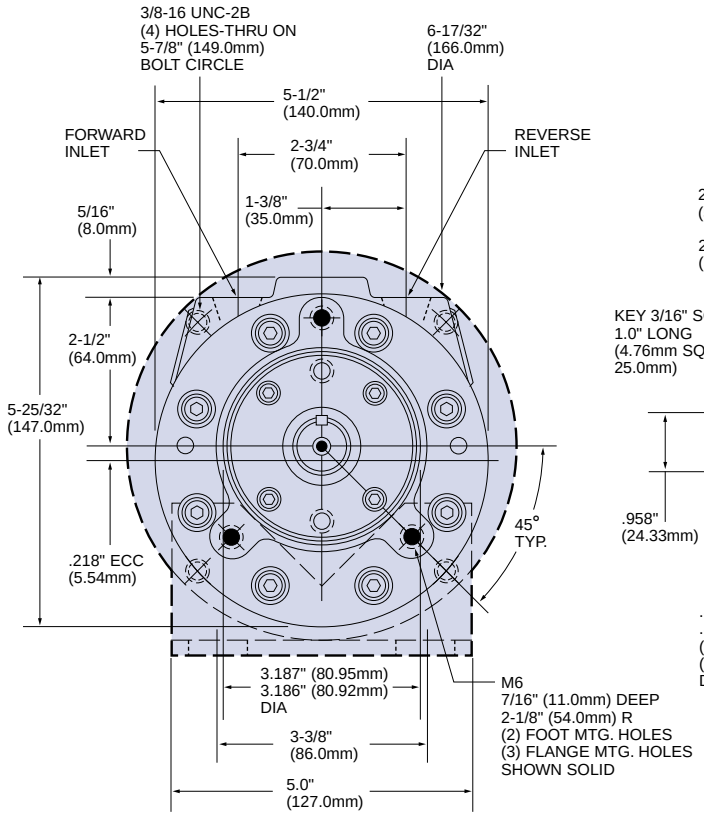

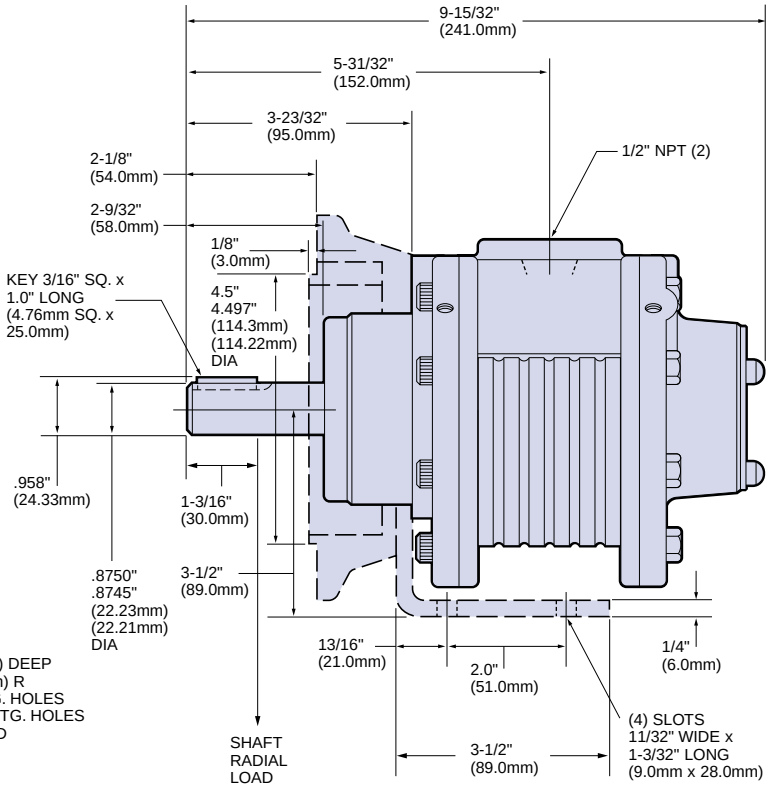

INDUSTRIAL MULTI-VANE AIR MOTORS

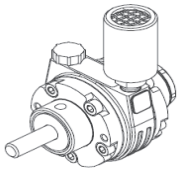

GAST Model Style	Rotation Bias	FENNER Model Style	I-R SELECT Series Model Style (+/ Foot Bracket)	Max. Power (hp)	Max. Free Speed (rpm)	Mounting Style
1AM-NCC-12	Left hand (CCW)		SM1AMAL / MRV003A	0.33	15,200	Hub Mount
1AM-NCW-14	Right Hand (CW)		SM1AMA / MRV003A	0.33	15,200	Hub Mount
1AM-NRV-39A	Reversible		SM1AMA / MRV003A	0.33	15,200	Hub Mount
1AM-NRV-63A	Reversible		SM1AMA / MRV003A	0.33	15,200	Hub Mount
1UP-NCC-1A	Left hand (CCW)		SM1UPC / MRV005C	0.60	12,500	Hub Mount
1UP-NCW-2A	Right Hand (CW)		SM1UPC / MRV005C	0.60	12,500	Hub Mount
1UP-NRV-3A	Reversible	V1X	SM1UPC / MRV005C	0.60	12,500	Hub Mount
1UP-NRV-10	Reversible		SM1UPC / MRV005C	0.60	12,500	Hub Mount
AG585	1AM Foot Mount Bracket		(MRV003A-AG587)			
2AM-NCC-16	Left hand (CCW)	2VMX/CCL	SM2AMC / MRV009C	0.88	8,070	Hub or Face Mount
2AM-NCC-16F	Left hand (CCW)		SM2AMC / MRV009C	0.88	8,070	Hub or Face Mount
2AM-NCW-7A	Right Hand (CW)	2VMX/CCW	SM2AMC / MRV009C	0.88	8,070	Hub or Face Mount
2AM-NCW-7B	Right Hand (CW)		SM2AMC / MRV009C	0.88	8,070	Hub or Face Mount
2AM-NRV-89	Reversible	VA2X	SM2AMC / MRV009C	0.88	8,070	Hub or Face Mount
2AM-FCC-1	Left hand (CCW)	2VMJ/CCW	SM2AMC+ /MRV009C(+/MRV015B-AH636)	0.88	8,070	Foot Mount
2AM-FCW-13	Right Hand (CW)	2VMJ/CW	SM2AMC+ /MRV009C(+/MRV015B-AH636)	0.88	8,070	Foot Mount
2AM-FRV-501	Reversible	VA2J	SM2AMC+ /MRV009C(+/MRV015B-AH636)	0.88	8,070	Foot Mount
2AM-NCC-43A	Left hand (CCW)	2VMC/CCW	SM2AMAN /MRV009C(+/MRV009B-AH635)	0.88	8,070	NEMA56C flange mount
	Right Hand (CW)	2VMC/CW	SM2AMAN /MRV009C(+/MRV009B-AH635)	0.88	8,070	NEMA56C flange mount
2AM-NRV-90	Reversible	VA2C	SM2AMAN /MRV009C(+/MRV009B-AH635)	0.88	8,070	NEMA56C flange mount
	Left hand (CCW)	4VMX/CCW	SM4AMB / MRV015B	1.5	7,900	Hub or Face Mount
	Right Hand (CW)	4VMX/CW	SM4AMB / MRV015B	1.5	7,900	Hub or Face Mount
4AM-NRV-22B	Reversible	VA4K	SM4AMB / MRV015B	1.5	7,900	Hub or Face Mount
4AM-NRV-22F	Reversible		SM4AMB / MRV015B	1.5	7,900	Hub or Face Mount
4AM-NRV-54A	Reversible		SM4AMB / MRV015B	1.5	7,900	Hub or Face Mount
	Left hand (CCW)	4VMJ/CCW	SM4AMB+ /MRV015A(+/MRV015A-AH634)	1.5	7,900	Foot Mount
	Right Hand (CW)	4VMJ/CW	SM4AMB+ /MRV015A(+/MRV015A-AH634)	1.5	7,900	Foot Mount
4AM-FRV-13C	Foot Mount	VA4J	SM4AMB+ /MRV015A(+/MRV015A-AH634)	1.5	7,900	Foot Mount
4AM-FRV-13H	Foot Mount		SM4AMB+ /MRV015A(+/MRV015A-AH634)	1.5	7,900	Foot Mount
4AM-FRV-63A	Foot Mount		SM4AMB+ /MRV015A(+/MRV015A-AH634)	1.5	7,900	Foot Mount
	Left hand (CCW)	4VMC/CCW	SM4AMAN /MRV015A(+/MRV015A-AH633)	1.5	7,900	NEMA56C flange mount
	Right Hand (CW)	4VMC/CW	SM4AMAN /MRV015A(+/MRV015A-AH633)	1.5	7,900	NEMA56C flange mount
4AM-NRV-50C	Reversible	VA4C	SM4AMAN /MRV015A(+/MRV015A-AH633)	1.5	7,900	NEMA56C flange mount
4AM-NRV-70C	Reversible		SM4AMAN /MRV015A(+/MRV015A-AH633)	1.5	7,900	NEMA56C flange mount
6AM-NRV-7A	Reversible	VA6X	SM6AMA / MRV040A	3.6	7,900	FACE mount
6AM-FRV-5A	Reversible	VA6J	SM6AMA+ /MRV040A(+/MRV015A-AH634)	3.6	7,900	Foot mount
6AM-FRV-23A	Reversible		SM6AMA+ /MRV040A(+/MRV015A-AH634)	3.6	7,900	Foot mount
6AM-NRV-11A	Reversible	VA6C	SM6AMAN /MRV040A(+/MRV015A-AH633)	3.6	7,900	NEMA56C flange mount
6AM-NRV-22A	Reversible		SM6AMAN /MRV040A(+/MRV015A-AH633)	3.6	7,900	NEMA56C flange mount
8AM-NRV-5B	Reversible	VA8X	SM8AMA / MRV050A	4.8	7,000	FACE mount
8AM-NRV-42A	Reversible		SM8AMA / MRV050A	4.8	7,000	FACE mount
8AM-FRV-2B	Reversible	VA8J	SM8AMA+ /MRV050A(+/MRV050A-AH640)	4.8	7,000	Foot Mount
8AM-FRV-30A	Reversible		SM8AMA+ /MRV050A(+/MRV050A-AH640)	4.8	7,000	Foot Mount
8AM-NRV-28A	Reversible	VA8C	SM8AMAN /MRV050A(+/MRV050A-AH641)	4.8	7,000	NEMA182C,-4C,143TC,-5TC
8AM-NRV-32A	Reversible		SM8AMAN /MRV050A(+/MRV050A-AH641)	4.8	7,000	NEMA182C,-4C,143TC,-5TC

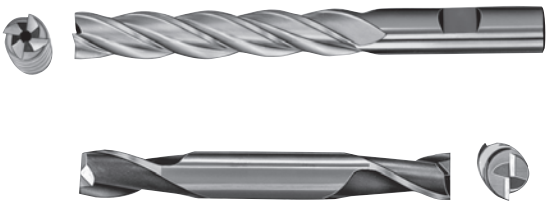

FIGURE 1

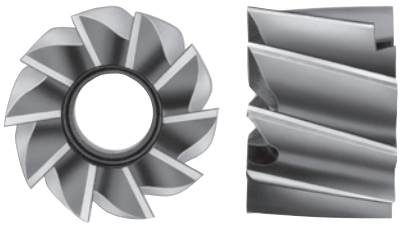

FIGURE 2

FIGURE 3

FIGURE 4

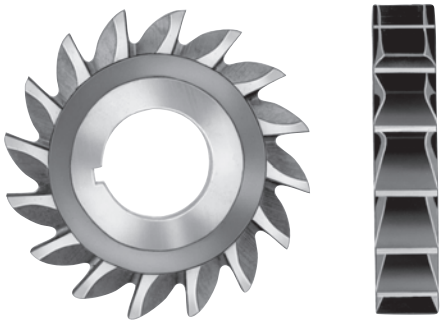

FIGURE 5

ARO milling and sawing motors have been used on such diverse applications as milling screw slots in molded fiberglass and straddle milling a 3/4" hex shape on round bar stock. For cost reduction in secondary machining, it is feasible to install a mill motor on the cross-slide of a machine to mill or spotface a slot or diameter on the outside diameter of a workpiece. ARO's mill motor range covers the majority of primary and secondary machining applications.

Industrial milling cutters are available in a wide variety of kinds, sizes and shapes for specific applications. Certain basic types are normally used with ARO milling motors.

1. **END MILLS.** These are designed for milling slots, keyways and pockets where arbor-type cutters cannot be applied. The cutting edges, as the name implies, are at the end of the mill rather than on the circumference.

2. **SHELL END MILLS.** Similar in application to standard end mills, except that they are mounted to an arbor and used whenever the diameter of a standard end mill is too small for the application.

3. **WOODRUFF KEYSLOT CUTTERS.** Used for cutting keyslots in arbors or shafts for standard Woodruff keys. Available in arbor-type or shank-type.

4. **PLAIN METAL-SLITTING SAWS.** These cutters are designed with teeth around the entire circumference. Sides are concave to provide clearance in cutoff operations and for slotting heads of screws and shafts.

5. **SIDE MILLING CUTTERS.** Used for milling plain and flat surfaces.

Rotary-Vane Pneumatic Milling & Sawing Motors

Proper motor selection should be governed by the fact that motor load speed, or the point at which peak horsepower is reached, occurs at approximately one-half the catalogued free speed. Feed rate should be controlled to load the motor to peak horsepower for maximum efficiency. The load-speed column on each catalog page should be used for motor selection. Feed rate and cutting speed will determine the amount of horsepower required for a specific application.

Three factors determine correct milling motor selection:

1. Horsepower-Formula given below.
2. RPM - Refer to chart for correct speed according to type of material.
3. Feed rate on face mills, or per-tooth rate on slotting, side mills or end mills.

FORMULA FOR MODEL SELECTION

$$HP = \frac{\text{Width of cut} \times \text{depth of cut} \times \text{feed rate per min.}}{\text{K Factor}}$$

$$F, \text{ feed rate} = \frac{f, \text{ feed per tooth} \times t, \text{ number of teeth} \times n,}{\text{RPM of cutter. Alternately, see reference chart.}}$$

$$RPM = \frac{4 \times \text{SFM or surface feet per minute}}{D, \text{ diameter of cutter in inches}}$$

K Factors for Common Materials

Material	K	Material	K	Material	K	Material	K
Magnesium	4.0	Cast Iron		To 400	.5	220,000-260,000 p.s.i.	.4
Aluminum	4.0	Ferritic	1.5	To 500	.4	260,000-300,000 p.s.i.	.3
Copper	2.0	Pearlitic	1.0	Stainless Steel			
Brass	2.5	Chilled	.6	Free Machining	1.0	High Temperature Alloys	
Bronze	2.0	Steel		Other	.6	Nickel Base	.4
Malleable Iron	1.0	To 150	1.0	High-Tensile Alloys		Cobalt Base	.4
		To 300	.8	180,000-220,000 p.s.i.	.5	Austenitic	.4

REFERENCE CHART

Work Material	Hardness BHN	Speed R.P.M.	Feed Per Minute Face Mills	Feed Per Tooth: Slotting & Side Mills	Feed Per Tooth: End Mills	Work Material	Hardness BHN	Speed R.P.M.	Feed Per Minute Face Mills	Feed Per Tooth: Slotting & Side Mills	Feed Per Tooth: End Mills
Free Machining Steels, Plain Carbon Steels, Alloy Steels, Series 400 & 500 Stainless	150 200 250 300 350	500-900 450-800 400-700 350-600 300-450	.010-.014 .010-.014 .008-.010 .008-.010 .006-.008	.008-.010 .008-.010 .006-.008 .006-.008 .004-.006	.002-.004 .002-.004 .001-.003 .001-.003 .001-.003	Magnesium Alloys Aluminum Alloys	– Low Silicon High Silicon	900-1600 1200-1800 900-1200	.012-.018 .012-.018 .008-.012	.010-.014 .010-.014 .008-.010	.003-.005 .003-.006 .003-.005
Series 200-300 Stainless Sheets	150-250	250-450	.006-.010	.006-.008	.001-.003	Titanium Pure	100-275	250-350	.004-.006	.004-.006	.002-.003
Hot Work Tool Steels	150-250 200-250	350-450 250-350	.010-.012 .008-.010	.006-.010 .005-.008	.001-.003 .001-.002	Copper Alloys	20-70 RB 60-100 RB	900-1300 800-1000	.012-.016 .008-.012	.008-.012 .007-.010	.003-.004 .002-.004
Cold Work Tool Steels	200-250	250-350	.007-.010	.005-.008	.001-.003	Brass & Bronze	To 200	600-900	.010-.012	.008-.010	.003-.004
High-Manganese Steel	170-220	100-200	.007-.010	.005-.008	.002-.003	Zinc Alloys	Cast	800-1100	.006-.009	.005-.008	.002-.003
Gray Cast Iron	110-220 220-320	300-400 125-250	.012-.016 .008-.012	.008-.012 .006-.010	.002-.004 .002-.003	Manganese	140-220	150-200	.005-.008	.004-.006	.002-.004
Nodular Iron	140-250 250-400	325-450 225-300	.012-.016 .008-.012	.008-.012 .006-.010	.002-.004 .002-.003	Thermoplastics	–	500-1100	.006-.010	.005-.008	.003-.005
Malleable Iron	110-220 200-280	250-350 200-300	.012-.016 .008-.012	.008-.012 .006-.010	.002-.004 .002-.003	Thermosetting Plastics	–	500-1100	.006-.010	.005-.008	.003-.005

000-Series Forward-Rotation Milling Motors,1/4" Capacity

SPECIFICATIONS

MODEL	SPINDLE	R.P.M. FREE SPEED	R.P.M. LOAD SPEED @MAX. H.P.	TORQUE STALL lb. ft.	TORQUE STALL Nm	TORQUE OUTPUT @MAX. H.P. lb. ft.	TORQUE OUTPUT @MAX. H.P. Nm	AIR CONSUMPTION @FREE SPEED SCFM	AIR CONSUMPTION @FREE SPEED L/s	SOUND LEVEL @FREE SPEED dB(A)	WEIGHT lbs.	WEIGHT kg.	GEAR REDUCTION
NON-REVERSIBLE - .25 H.P.													
7533-2-B	1/4" Maximum Collet Capacity	550	325	8.2	10.6	4.0	5.1	18.1	8.5	75	2.07	.93	Double
7534-2-B		900	550	5.0	6.4	2.4	3.2	18.1	8.5	75	2.07	.93	Double
7535-2-C		2,700	1,600	1.75	2.2	.82	1.1	18.1	8.5	75	1.77	.80	Single
7536-2-B		4,500	2,700	1.05	1.3	.49	.6	18.1	8.5	75	1.77	.80	Single
7537-2-C		20,000	12,000	.22	.30	.11	.1	18.1	8.5	75	1.77	.80	Single

Collet Insert No.	Size	Minimum Capacity Inches	Minimum Capacity mm	Maximum Capacity Inches	Maximum Capacity mm
31812-1	3/64"	1/64"	.40	3/64"	1.19
31812-2	5/64"	3/64"	1.19	5/64"	1.98
31812-3	3/32"	1/16"	1.59	3/32"	2.38
31812-4	1/8"	3/32"	2.38	1/8"	3.18
31812-5	5/32"	1/8"	3.18	5/32"	3.97
31812-6	3/16"	5/32"	3.97	3/16"	4.76
31812-7	7/32"	3/16"	4.76	7/32"	5.56
31812-8	1/4"	7/32"	5.56	1/4"	6.35

Approx. Tooling Penetration - 1 1/8" (28.6mm)

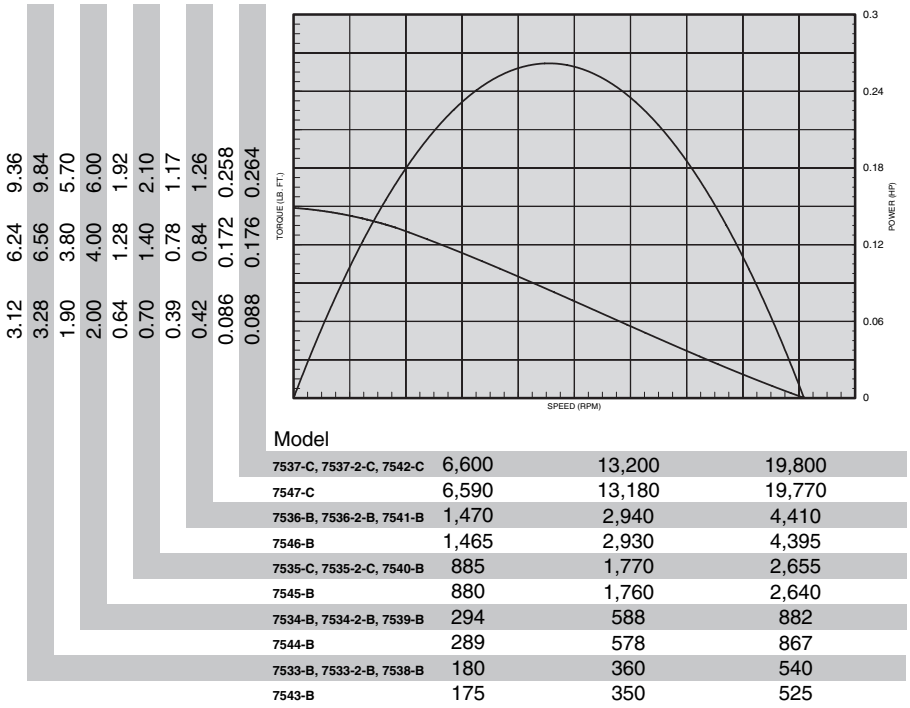

STANDARD EQUIPMENT

Steel motor housing. flush-type grease fittings at rotation points for gear and bearing lubrication, exhaust manifold rotatable within 360°, muffler, integral collet spindle with 31812-8 1/4" capacity collet for end mills and Woodruff key slot cutters, duplex bearing on drive spindle for maximum radial support.

NO COST OPTION

Another size collet insert may be substituted for the standard 1/4" capacity insert. Specify collet insert 31812-( ) in the desired size from the chart below.

EQUIPMENT OPTIONS

41563 Flange Bracket

45088 Foot Bracket

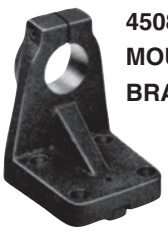

45088 FOOT MOUNTING BRACKET

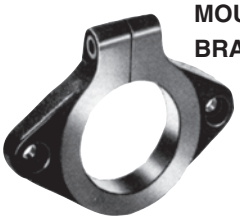

41563 FLANGE MOUNTING BRACKET

Dimensions – 000-Series Milling Motors & Mounts

000-SERIES AND MOUNTING ACCESSORY DIMENSIONS

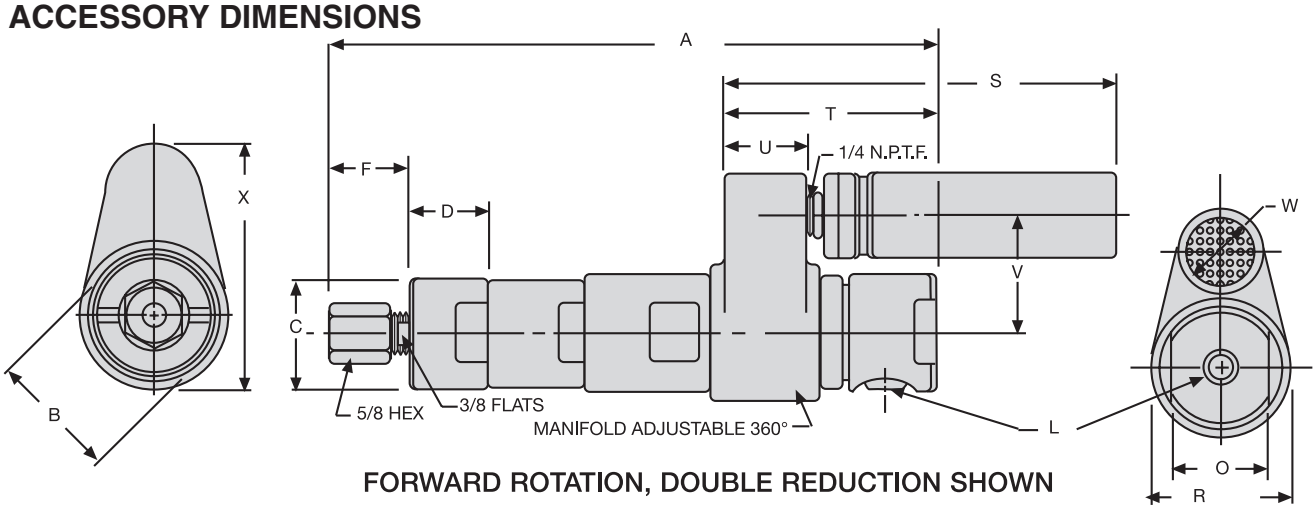

FORWARD ROTATION, DOUBLE REDUCTION SHOWN

Models	Gear Reduction	Dimension A
7535-2-C, 7536-2-B 7537-2-C	Single	5-15/16 151 mm
7533-2-B, 7534-2-B	Double	7 178 mm

Scale	B	C	D	F	L	O	R
Inches	1-3/8	1.311 1.312	.870 .890	15/16 (Approx.)	1/8 NPTF	1-1/8	1-5/8
mm	35	33.30 33.32	22.10 22.61	24 (Approx.)	Air Inlet	28	41

Scale	S	T	U	V	W	X
Inches	4-9/16	2-15/32	31/32	1-3/8	1	2-11/16
mm	116	63	25	35	25	68

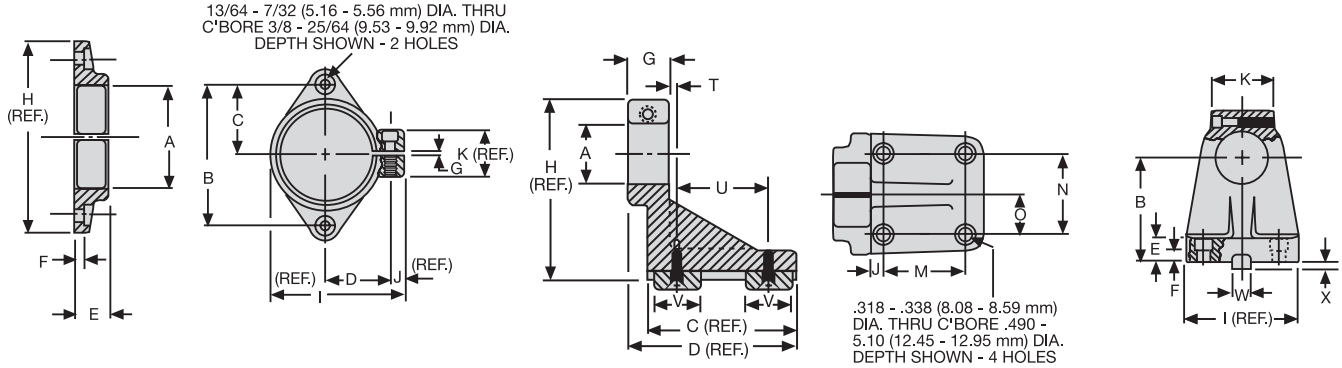

41563 FLANGE MOUNTING BRACKET

Scale	A	B	C	D	E	F
Inches	1.312 1.314	2.745 2.755	1.370 1.380	1.240 1.260	.490 .510	.146 .166
mm	33.32 33.38	69.72 69.98	34.80 35.05	31.50 32.00	12.45 12.95	3.71 4.22

Scale	G	H	I	J	K
Inches	1/64 3/64	3-3/8	2-9/16	1/4	1
mm	0.40 1.19	85.73	65.09	6.35	25.40

45088 FOOT MOUNTING BRACKET

Scale	A	B	C	D	E	F	G	H	I	J
Inches	1.312 1.313	2.749 2.751	3-1/4	3-11/16	.609 .640	.296 .328	.875 .973	4	3	.343 .375
mm	33.32 33.35	69.82 69.88	82.55	93.66	15.47 16.26	7.52 8.33	22.23 23.80	101.60	76.20	8.71 9.53

Scale	K	M	N	O	T	U	V	W	X
Inches	1.542 1.582	1.995 2.005	1.995 2.005	.995 1.005	.140 .156	1.984 2.015	.985 1.015	.499 .500	.173 .198
mm	39.17 40.18	50.67 50.93	50.67 50.93	25.27 25.53	3.56 3.96	50.39 51.18	25.02 25.78	12.67 12.70	4.39 5.03

0-Series Forward-Rotation Milling Motors

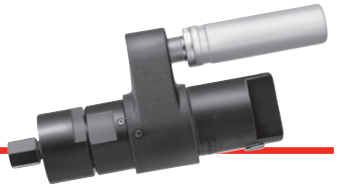

SPECIFICATIONS

MODEL	SPINDLE	R.P.M. FREE SPEED	R.P.M. LOAD SPEED @MAX. H.P.	TORQUE STALL lb. ft.	TORQUE STALL Nm	TORQUE OUTPUT @MAX. H.P. lb. ft.	TORQUE OUTPUT @MAX. H.P. Nm	AIR CONSUMPTION @FREE SPEED SCFM	AIR CONSUMPTION @FREE SPEED L/s	SOUND LEVEL @FREE SPEED dB(A)	WEIGHT lbs.	WEIGHT kg.	GEAR REDUCTION
NON-REVERSIBLE - .60 H.P.													
8232-1	1/4" Maximum Collet Capacity	19,000	9,800	.70	.9	.32	.4	41.0	19.4	80	2.87	1.29	Single
8232-2		5,700	2,900	2.15	2.9	1.10	1.5	41.0	19.4	80	2.87	1.29	Single
8232-3		3,500	1,750	3.50	4.7	1.80	2.4	41.0	19.4	80	2.87	1.29	Single
8232-4		2,800	1,400	4.50	6.1	2.20	3.0	41.0	19.4	80	2.87	1.29	Single
8232-5		1,650	840	7.50	10.2	3.80	5.1	41.0	19.4	80	3.62	1.63	Double
8232-6		1,000	500	12.00	16.3	6.20	8.4	41.0	19.4	80	3.62	1.63	Double
8232-7		800	390	14.80	20.0	8.00	10.8	41.0	19.4	80	3.62	1.63	Double

Collet Insert No.	Size	Minimum Capacity Inches	Minimum Capacity mm	Maximum Capacity Inches	Maximum Capacity mm
31812-1	3/64"	1/64"	.40	3/64"	1.19
31812-2	5/64"	3/64"	1.19	5/64"	1.98
31812-3	3/32"	1/16"	1.59	3/32"	2.38
31812-4	1/8"	3/32"	2.38	1/8"	3.18
31812-5	5/32"	1/8"	3.18	5/32"	3.97
31812-6	3/16"	5/32"	3.97	3/16"	4.76
31812-7	7/32"	3/16"	4.76	7/32"	5.56
31812-8	1/4"	7/32"	5.56	1/4"	6.35

Approx. Tooling Penetration - 1 1/4" (31.8mm)

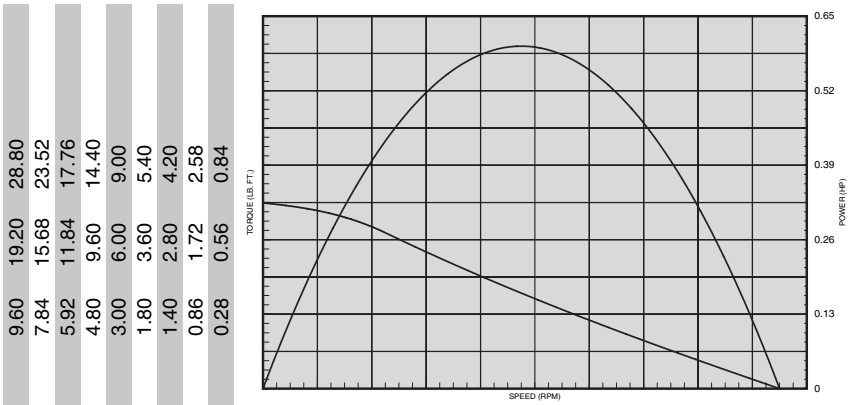

Model			
8229-1A,8230-1A,8232-1	6,000	12,000	18,000
8229-2A,8230-2A,8232-2	1,800	3,600	5,400
8229-3A,8230-3A,8232-3	1,110	2,220	3,330
8229-4A,8230-4A,8232-4	888	1,776	2,664
8229-5A,8230-5A,8232-5	520	1,040	1,560
8229-6A,8230-6A,8232-6	315	630	945
8229-7A,8230-7A,8232-7	252	504	756
8229-8A,8230-8A	189	378	567
8229-9A,8230-9A	159	318	477

STANDARD EQUIPMENT

Steel motor housing, flush-type grease fittings at rotation points for gear and bearing lubrication, exhaust manifold rotatable within 360°, muffler, integral collet spindle with 31812-8 1/4" capacity collet for end mills and Woodruff key slot cutters, duplex bearing on drive spindle for maximum radial support.

NO COST OPTION

Another size collet insert may be substituted for the standard 1/4" capacity insert. Specify collet insert 31812-() in the desired size from the chart below.

EQUIPMENT OPTIONS

45057 Foot Bracket

41561 Flange Bracket

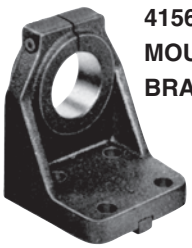

41561 FOOT MOUNTING BRACKET

41561 FLANGE MOUNTING BRACKET

Dimensions – 0-Series Milling Motors & Mounts

0-SERIES AND MOUNTING ACCESSORY DIMENSIONS

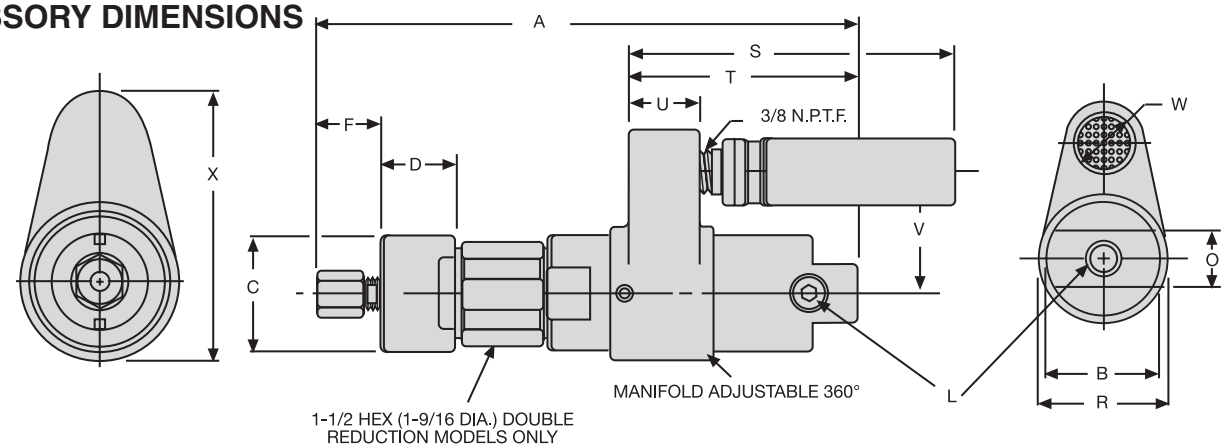

FORWARD ROTATION, DOUBLE REDUCTION SHOWN

Models	Gear Reduction	Dimension A
8232-( )	Single	6-7/8 175 mm
	Double	8-3/16 208 mm

Scale	B	C	D	F	L	O	R
Inches	1-3/4	1.740 1.739	1-5/32	15/16 (Approx.)	1/4 NPTF	7/8	2
mm	44	44.20 44.17	29	24 (Approx.)	Air Inlet	22	51

Scale	S	T	U	V	W	X
Inches	4-7/8	3-13/32	1-1/16	1-13/16	1	3-7/16
mm	124	86	27	46	25	87

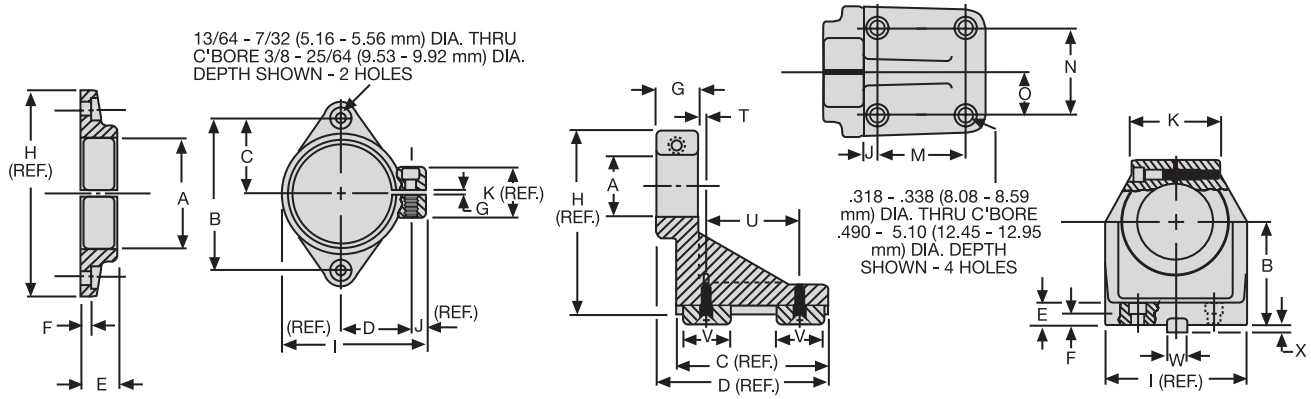

41561 FLANGE MOUNTING BRACKET

Scale	A	B	C	D	E	F
Inches	1.741 1.740	2.745 2.755	1.370 1.380	1.240 1.260	.490 .510	.146 .166
mm	44.22 44.20	69.72 69.98	34.80 35.05	31.50 32.00	12.45 12.95	3.71 4.22

Scale	G	H	I	J	K
Inches	1/64 3/64	3-3/8	2-9/16	1/4	1
mm	0.40 1.19	85.73	65.09	6.35	25.40

45057 FOOT MOUNTING BRACKET

Scale	A	B	C	D	E	F	G	H	I	J
Inches	1.741 1.740	2.749 2.751	3-9/16	3-3/4	.609 .640	.296 .328	1”	4-3/8	3-3/4	.296 .328
mm	44.22 44.20	69.82 69.88	90.49	95.25	15.47 16.26	7.52 8.33	25.40	111.13	95.25	7.52 8.33

Scale	K	M	N	O	T	U	V	W	X
Inches	2.343 2.406	1.995 2.005	1.995 2.005	.995 1.005	.109 .140	1.984 2.015	.985 1.015	.499 .500	.173 .198
mm	59.41 61.11	50.67 50.93	50.67 50.93	25.27 25.53	2.77 3.56	50.39 51.18	25.02 25.78	12.67 12.70	4.39 5.03

2200-Series Forward - Rotation Milling Motors

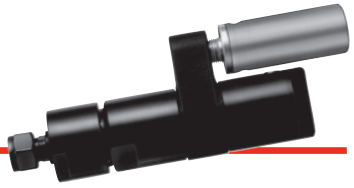

SPECIFICATIONS

MODEL	SPINDLE	R.P.M. FREE SPEED	R.P.M. LOAD SPEED @MAX H P	TORQUE STALL lb ft	TORQUE STALL Nm	TORQUE OUTPUT @MAX. H.P. lb ft	TORQUE OUTPUT @MAX. H.P. Nm	AIR CONSUMPTION @FREE SPEED SCFM	AIR CONSUMPTION @FREE SPEED L/s	SOUND LEVEL @FREE SPEED dB(A)	WEIGHT lbs	WEIGHT kg	GEAR REDUCTION
NON-REVERSIBLE - .85 H.P.													
7800-2B	3/8" Maximum Collet Capacity	18,000	9,000	1.00	1.4	.50	.68	41.7	19.7	78	4.89	2.20	Single
7801-2B		4,600	2,400	4.00	5.5	1.86	2.5	41.7	19.7	78	4.89	2.20	Single
7802-2B		2,500	1,300	7.50	10.3	3.43	4.7	41.7	19.7	78	4.89	2.20	Single
7803-2B		1,200	600	16.00	21.9	7.44	10.2	41.7	19.7	78	6.39	2.86	Double
7804-2B		650	320	30.00	41.2	13.95	19.1	41.7	19.7	78	6.39	2.86	Double

COLLET SLEEVES

Collet Insert No.	Size	Minimum Capacity Inches	Minimum Capacity mm	Maximum Capacity Inches	Maximum Capacity mm
32968-1	1/8"	3/32"	2.38	1/8"	3.18
32968-2	5/32"	1/8"	3.18	5/32"	3.97
32968-3	3/16"	5/32"	3.97	3/16"	4.76
32968-4	7/32"	3/16"	4.76	7/32"	5.56
32968-5	1/4"	7/32"	5.56	1/4"	6.35
32968-6	9/32"	1/4"	6.35	9/32"	7.14
32968-7	5/16"	9/32"	7.14	5/16"	7.94
32968-8	11/32"	5/16"	7.94	11/32"	8.73
32968-9	3/8"	11/32"	8.73	3/8"	9.53

Approx. Tooling Penetration - 2" (51 mm)

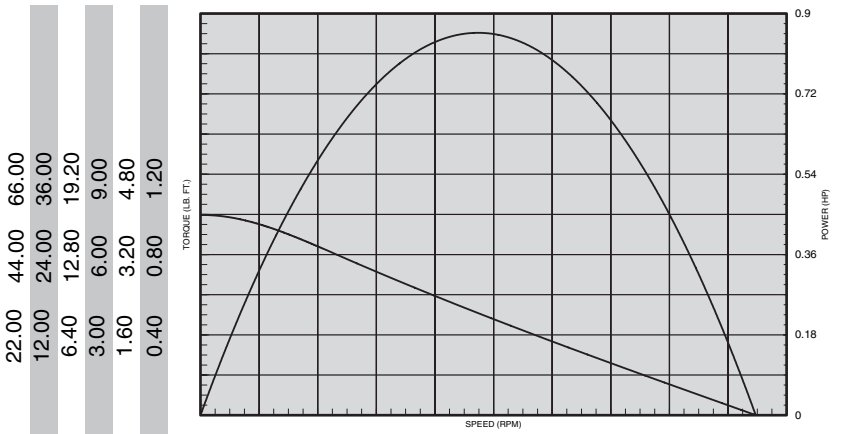

Model			
7800-B (-1B, -2B, -4B)	5,700	11,400	17,100
7801-B (-1B, -2B, -3B, -4B)	1,440	2,880	4,320
7802-B (-1B, -2B, -4B)	795	1,590	2,385
7803-B (-1B, -2B, -3B, -4B)	378	756	1,134
7804-B (-1B, -2B, -3B)	204	408	612
7805-B (-1B, -3B, -4B)	110	220	330

STANDARD EQUIPMENT

Steel motor housing, flush-type grease fittings at rotation points for gear and bearing lubrication, exhaust manifold rotatable within 360°, muffler, integral collet spindle with 32968-9 3/8" capacity for end mills and Woodruff key slot cutters, duplex bearing support on drive spindle to provide maximum radial support.

NO COST OPTION

Another size collet insert may be substituted for the standard 3/8" capacity insert. Specify collet insert 32968-( ) in the desired size from the chart below.

EQUIPMENT OPTIONS

45058 Foot Bracket

41559 Flange Bracket

45058 FOOT MOUNTING BRACKET

41559 FLANGE MOUNTING BRACKET

Dimensions – 2200-Series Milling Motors & Mounts

2200-SERIES AND MOUNTING ACCESSORY DIMENSIONS

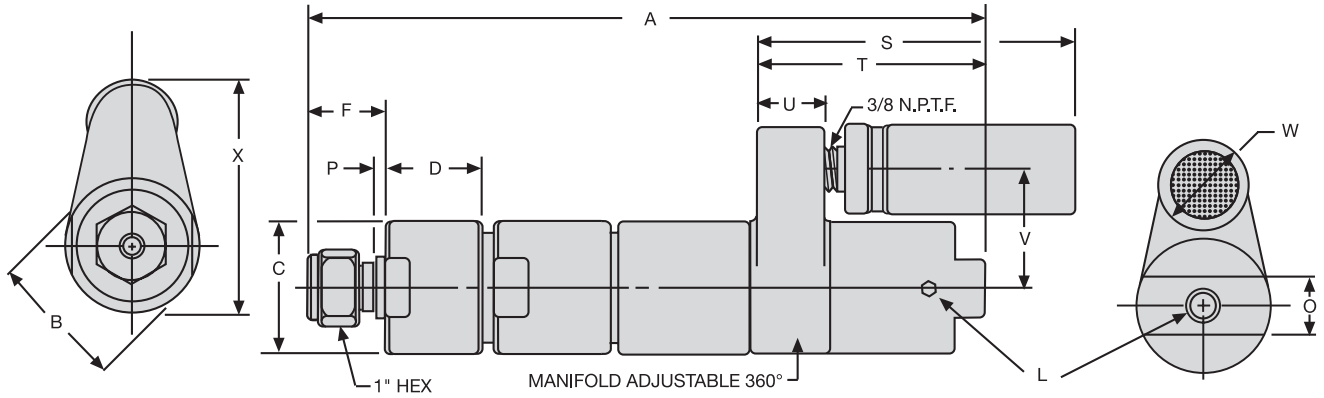

FORWARD ROTATION, DOUBLE REDUCTION SHOWN

Models	Gear Reduction	Dimension A
7800-2B, 7801-2B, 7802-2B	Single	8-11/32 212 mm
7803-2B, 7804-2B, 7805-2B	Double	10-1/16 255 mm

Scale	B	C	D	F	L	O
Inches	2	2.001 2.000	1.422 1.452	1-5/32 (Approx.)	1/4 NPTF	7/8
mm	51	50.80 50.83	36.12 36.88	29 (Approx.)	Air Inlet	22

Scale	P	S	T	U	V	W	X
Inches	.097 .157	4-7/8	3-1/2	1-1/16	1-13/16	1-3/8	3-1/2
mm	2.46 3.99	124	89	27	46	35	89

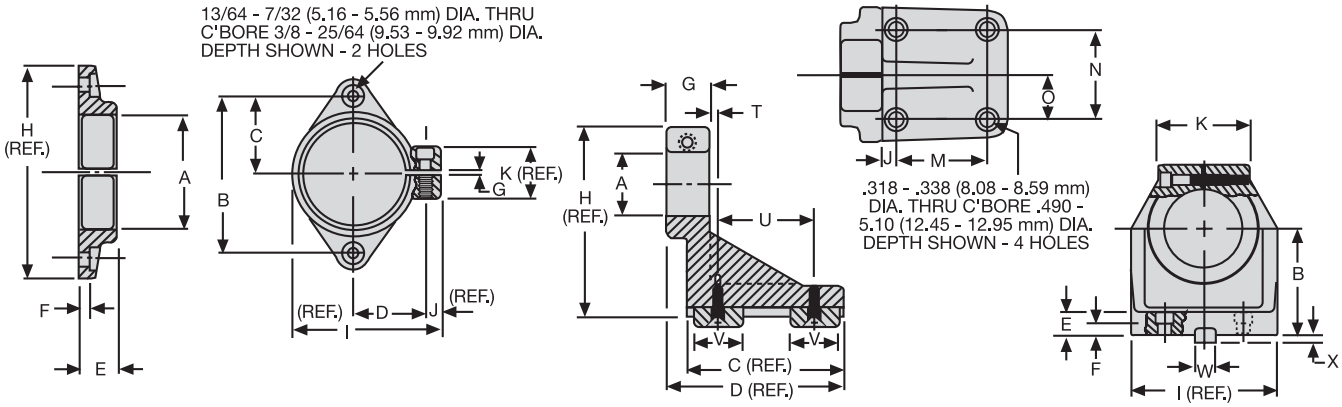

41559 FLANGE MOUNTING BRACKET

Scale	A	B	C	D	E	F
Inches	2.000 2.002	2.990 3.010	1.490 1.510	1.365 1.385	.661 .681	.177 .197
mm	50.80 50.85	75.95 76.45	37.85 38.35	34.67 35.18	16.79 17.30	4.50 5.00

Scale	G	H	I	J	K
Inches	1/64 3/64	3-5/8	2-7/8	5/16	1
mm	0.40 1.19	92.08	73.03	7.94	25.40

45058 FOOT MOUNTING BRACKET

Scale	A	B	C	D	E	F	G	H	I	J
Inches	2.000 2.001	2.749 2.751	3-9/16	3-3/4	.609 .640	.296 .328	1"	4-3/8	3-3/4	.296 .328
mm	50.80 50.83	69.82 69.88	90.49	95.25	15.47 16.26	7.52 8.33	25.40	111.13	95.25	7.52 8.33

Scale	K	M	N	O	T	U	V	W	X
Inches	2.343 2.406	1.995 2.005	1.995 2.005	.995 1.005	.109 .140	1.984 2.015	.985 1.015	.499 .500	.173 .198
mm	59.41 61.11	50.67 50.93	50.67 50.93	25.27 25.53	2.77 3.56	50.39 51.18	25.02 25.78	12.67 12.70	4.39 5.03

2200-Series Forward-Rotation Side Mount Milling Motors

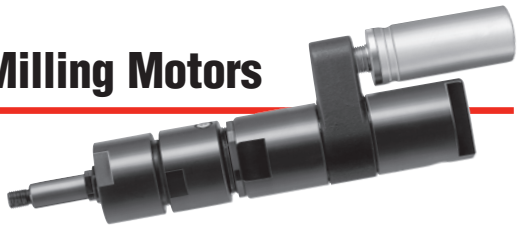

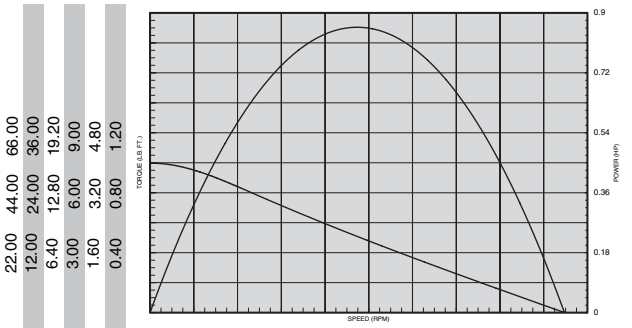

MODEL	SPINDLE	R.P.M. FREE SPEED	R.P.M. LOAD SPEED @MAX. H.P.	TORQUE STALL lb. ft.	TORQUE STALL Nm	TORQUE OUTPUT @MAX. H.P. lb. ft.	TORQUE OUTPUT @MAX. H.P. Nm	AIR CONSUMPTION @FREE SPEED SCFM	AIR CONSUMPTION @FREE SPEED L/s	SOUND LEVEL @FREE SPEED dB(A)	WEIGHT lbs.	WEIGHT kg.	GEAR REDUCTION
NON-REVERSIBLE - .85 H.P.													
7801-3B	7/16"-20 UNF-3A Threaded, Plus 1/8" Sq. Key Drive	4,600	2,400	4.00	5.5	1.86	2.5	41.7	19.7	78	4.89	2.20	Single
7803-3B		1,200	600	16.00	21.9	7.44	10.2	41.7	19.7	78	6.39	2.86	Double
7804-3B		650	320	30.00	41.2	13.95	19.1	41.7	19.7	78	6.39	2.86	Double
7805-3B		350	170	55.00	75.5	26.25	36.0	41.7	19.7	78	6.39	2.86	Double

STANDARD EQUIPMENT

Keyed and threaded spindle for shell end mills, metal-slitting saws and side-mill cutters, duplex bearing on drive spindle to provide maximum radial support. Also steel motor housing, flush-type grease fittings, exhaust manifold and muffler.
NOTE: Key not furnished.

EQUIPMENT OPTIONS

For mounting bracket and recommended hose, see listing on page 83.

2200-SERIES AND MOUNTING ACCESSORY DIMENSIONS

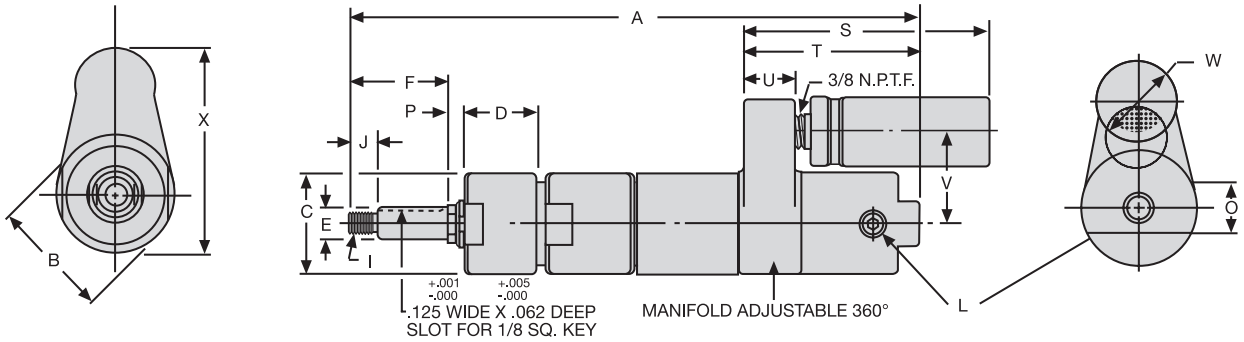

FORWARD ROTATION, DOUBLE REDUCTION SHOWN

Models			Gear Reduction	Dimension A	
7800-3B	7801-3B	7802-3B	Single	9-1/2	241 mm
7803-3B	7804-3B	7805-3B	Double	11-9/32	286 mm

Scale	B	C	D	E	F	I	J	L
Inches	2	2.000 2.001	1.422 1.452	.6240 .6245	1.932 1.942	7/16-20 UNF-3A Thread	.552 .557	1/4 NPTF Air Inlet
mm	51	50.80 50.83	36.12 36.88	15.85 15.86	40.07 49.33		14.02 14.53	

Scale	O	P	S	T	U	V	W	X
Inches	7/8	.270 .380	4-7/8	3-1/2	1-1/16	1-13/16	1-3/8	3-1/2
mm	22	6.86 9.65	124	89	27	46	35	89

Dimensions – 2200-Series Forward-Rotation Straddle Milling Motors

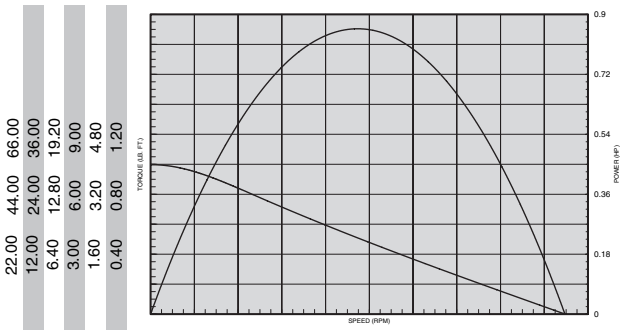

Model			
7800-B (-1B, -2B, -4B)	5,700	11,400	17,100
7801-B (-1B, -2B, -3B, -4B)	1,440	2,880	4,320
7802-B (-1B, -2B, -4B)	795	1,590	2,385
7803-B (-1B, -2B, -3B, -4B)	378	756	1,134
7804-B (-1B, -2B, -3B)	204	408	612
7805-B (-1B, -3B, -4B)	110	220	330

MODEL	SPINDLE	R.P.M. FREE SPEED	R.P.M. LOAD SPEED @MAX. H.P.	TORQUE STALL lb. ft.	TORQUE STALL Nm	TORQUE OUTPUT @MAX. H.P. lb. ft.	TORQUE OUTPUT @MAX. H.P. Nm	AIR CONSUMPTION @FREE SPEED SCFM	AIR CONSUMPTION @FREE SPEED L/s	SOUND LEVEL @FREE SPEED dB(A)	WEIGHT lbs.	WEIGHT kg.	GEAR REDUCTION
NON-REVERSIBLE - .85 H.P.													
7800-4B	3/8" Maximum Collet Capacity	18,000	9,000	1.00	1.4	.50	.68	41.7	19.7	78	4.89	2.20	Single
7801-4B		4,600	2,400	4.00	5.5	1.86	2.5	41.7	19.7	78	4.89	2.20	Single
7802-4B		2,500	1,300	7.50	10.3	3.43	4.7	41.7	19.7	78	4.89	2.20	Single
7803-4B		1,200	600	16.00	21.9	7.44	10.2	41.7	19.7	78	6.39	2.86	Double
7805-4B		350	170	55.00	75.5	26.25	36.0	41.7	19.7	78	6.39	2.86	Double

STANDARD EQUIPMENT

Square-drive gearing with 4 tapped holes for close-quarter mounting. Other standard equipment same as for motors on page 83.

EQUIPMENT OPTIONS

For other collet sleeves, filter-regulator-lubricator and recommended air hose, see listing on page 83.

2200-SERIES AND MOUNTING ACCESSORY DIMENSIONS

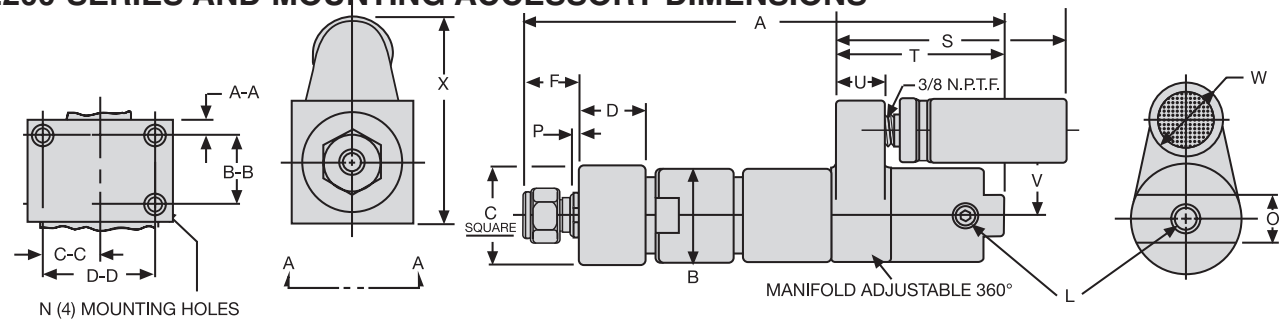

FORWARD ROTATION, DOUBLE REDUCTION SHOWN

Models			Gear Reduction	Dimension A
7800-4B	7801-4B	7802-4B	Single	8-3/8 213 mm
7803-4B	7804-4B	7805-4B	Double	10-3/16 259 mm

Scale	B	C	D	F	L	N	O	P	S
Inches	2	2.115 2.135	1.422 1.452	1-5/32 (Approx.)	1/4 NPTF	1/4-28 UNF-2B	7/8	.097 .157	4-7/8
mm	51	53.72 54.23	36.12 36.88	29 (Approx.)	Air Inlet	Thread 3/8" Deep	22	2.46 3.99	124

Scale	T	U	V	W	X	A-A	B-B	C-C	D-D
Inches	3-1/2	1-1/16	1-13/16	1-3/8	3-9/16	.213 .223	1.000 1.005	.807 .817	1.62 1.63
mm	89	27	46	35	90	5.41 5.66	25.40 25.53	20.50 20.75	41.15 41.40

44-Series Forward-Rotation Milling Motors

SPECIFICATIONS

MODEL	SPINDLE	R.P.M. FREE SPEED	R.P.M. LOAD SPEED @MAX. H.P.	TORQUE STALL lb. ft.	TORQUE STALL Nm	TORQUE OUTPUT @MAX. H.P. lb. ft.	TORQUE OUTPUT @MAX. H.P. Nm	AIR CONSUMPTION @FREE SPEED SCFM	AIR CONSUMPTION @FREE SPEED L/s	SOUND LEVEL @FREE SPEED dB(A)	WEIGHT lbs.	WEIGHT kg.	GEAR REDUCTION
NON-REVERSIBLE - 2.0 H.P.													
8200-4A-( )	3/4" Maximum Collet Capacity	275	140	124.00	168.0	75.00	101.6	95.0	44.8	80	18.24	8.20	Double
8201-4A-( )		500	255	70.50	95.5	41.00	55.5	95.0	44.8	80	18.24	8.20	Double
8202-4A-( )		900	445	40.50	54.9	24.00	32.5	95.0	44.8	80	18.24	8.20	Double
8203-4A-( )		2,000	1,050	18.00	24.4	10.00	13.5	95.0	44.8	80	13.82	5.21	Single
8204-4A-( )		3,500	1,740	10.20	13.8	6.00	8.1	95.0	44.8	80	13.82	5.21	Single
8205-4A-( )		14,000	7,000	2.85	3.9	1.50	2.0	95.0	44.8	80	13.82	5.21	Single

Collet Insert No.	Dash No.	Size	Minimum Capacity Inches	Minimum Capacity mm	Maximum Capacity Inches	Maximum Capacity mm	Collet Insert No.	Dash No.	Size	Minimum Capacity Inches	Minimum Capacity mm	Maximum Capacity Inches	Maximum Capacity mm
35264-1	-A	1/4"	.2187	5.56	.2500	6.35	35264-10	-K	17/32"	.5000	12.70	.5312	13.49
35264-2	-B	9/32"	.2500	6.35	.2812	7.14	35264-11	-L	9/16"	.5312	13.49	.5625	14.29
35264-3	-C	5/16"	.2812	7.14	.3125	7.94	35264-12	-M	19/32"	.5625	14.29	.5937	15.08
35264-4	-D	11/32"	.3125	7.94	.3437	8.73	35264-13	-N	5/8"	.5937	15.08	.6250	15.88
35264-5	-E	3/8"	.3437	8.73	.3750	9.53	35264-14	-P	21/32"	.6250	15.88	.6562	16.67
35264-6	-F	13/32"	.3750	9.53	.4062	10.32	35264-15	-Q	11/16"	.6562	16.67	.6875	17.46
35264-7	-G	7/16"	.4062	10.32	.4375	11.11	35264-16	-R	23/32"	.6875	17.46	.7187	18.26
35264-8	-H	15/32"	.4375	11.11	.4687	11.91	35264-17	-S	3/4"	.7187	18.26	.7500	19.05
35264-9	-J	1/2"	.4687	11.91	.5000	12.70							

Approx. Tooling Penetration - 2 7/16" (62 mm)

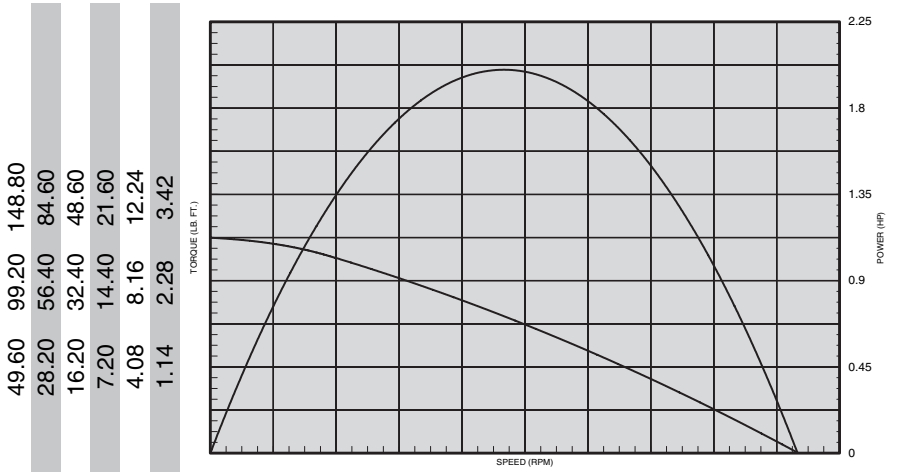

Model			
8205-A, 8205-4A-( )	4,500	9,000	13,500
8204-A, 8204-4A-( )	1,125	2,250	3,375
8203-4A-( )	638	1,276	1,914
8202-A, 8202-4A-( )	291	582	873
8201-A, 8201-4A-( )	160	320	480
8200-A, 8200-4A-( )	89	178	267

STANDARD EQUIPMENT

Steel motor housing, flush-type grease fittings at rotation points for gear and bearing lubrication, exhaust manifold rotatable within 360°, muffler, integral collet spindle with 35264-17 3/4" capacity for end mills and Woodruff key slot cutters, duplex bearing on drive spindle for maximum radial support.

NO COST OPTION

Another size collet insert may be substituted for the standard 3/4" capacity insert. Specify collet insert 35264-( ) in the desired size from the chart below.

EQUIPMENT OPTIONS

45090 Foot Bracket
41557 Flange Bracket

45090 FOOT MOUNTING BRACKET

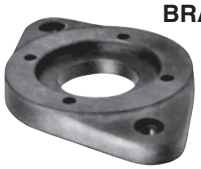

41557 FLANGE MOUNTING BRACKET

Dimensions – 44-Series Milling Motors & Mounts

44-SERIES AND MOUNTING ACCESSORY DIMENSIONS

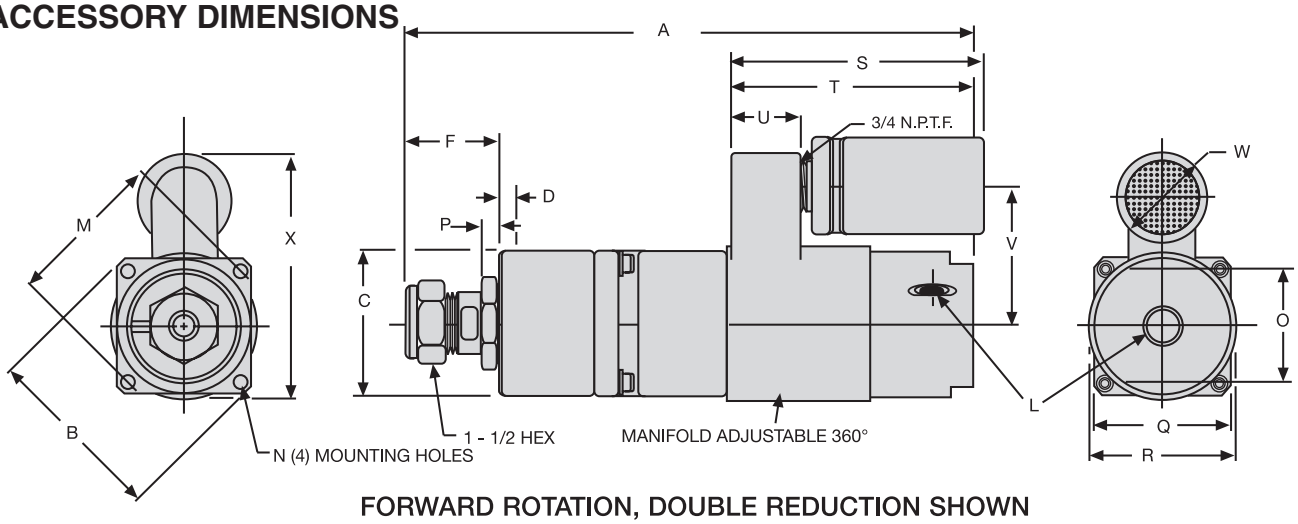

FORWARD ROTATION, DOUBLE REDUCTION SHOWN

Models	Gear Reduction	Dimension A
8203-4A 8204-4A 8205-4A	Single	11-11/16 297 mm
8200-4A 8201-4A 8202-4A	Double	14-1/2 368 mm

Scale	B	C	D	F	L	M	N	O	P
Inches	4.090 4.110	2.996 2.998	.302 .322	1-15/16 (Approx.)	3/8 NPTF	3.498 3.502	5/16-24 UNF-2B	2-1/2	.335 .364
mm	103.89 104.39	76.10 76.15	7.67 8.18	49 (Approx.)	Air Inlet	86.56 88.95	Thread	63	8.51 9.25

Scale	Q	R	S	T	U	V	W	X
Inches	3	3-3/16	5-3/16	5	1-7/16	2-27/32	2	5-7/16
mm	76	81	132	127	36	72	51	138

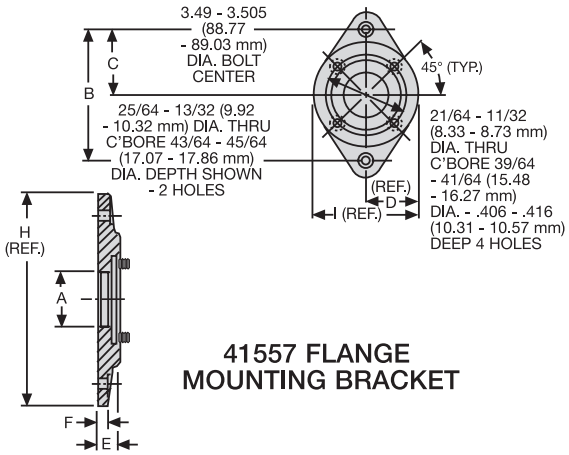

41557 FLANGE MOUNTING BRACKET

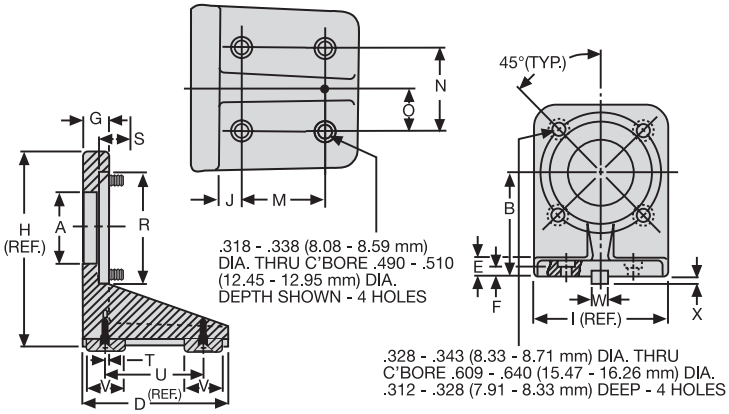

45090 FOOT MOUNTING BRACKET

Scale	A	B	C	D
Inches	1.927 1.947	5.745 5.755	2.870 2.880	2-1/4
mm	48.95 49.45	145.92 146.18	72.90 73.15	57.15

Scale	E	F	H	I
Inches	.708 .728	.365 .385	7-1/4	4-1/2
mm	17.98 18.49	9.27 9.78	184.15	114.3

Scale	A	B	D	E	F	G	H	I	J	M
Inches	1.927 1.947	3.124 3.126	4	.468 .531	.296 .328	.671 .703	5-1/8	4	.546 .578	1.995 2.005
mm	55.12 60.20	79.35 79.40	101.6	11.89 13.49	7.52 8.33	17.04 17.78	130.18	101.6	13.87 14.68	50.67 50.93

Scale	N	O	R	S	T	U	V	W	X
Inches	1.995 2.005	.995 1.005	2.999 3.000	.833 .853	.046 .078	2.609 2.640	.985 1.015	.499 .500	.173 .198
mm	50.67 50.93	25.27 25.53	76.17 76.20	21.16 21.67	1.17 1.98	66.27 67.06	25.02 25.78	12.674 12.700	4.39 5.03

Model 22N51-W/RC Multi-Vane Air Motors

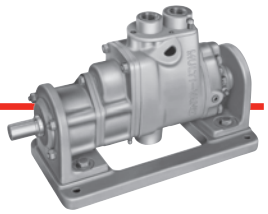

SPECIFICATIONS

Model	Max. Power		Speed at Max. Power	Free Speed	Starting Torque		Stall Torque		Air Consumption at Max. Power		Weight	
	hp	kw	rpm	rpm	lb.-ft.	Nm	lb.-ft.	Nm	scfm	m^3/m	lb.	kg
Reversible												
22N51-W/RC	1.75	1.31	208	280	49	66.4	66	89.5	55	1.6	21	9.5

Performance figures are at 90 psig (620 kPa) air pressure.

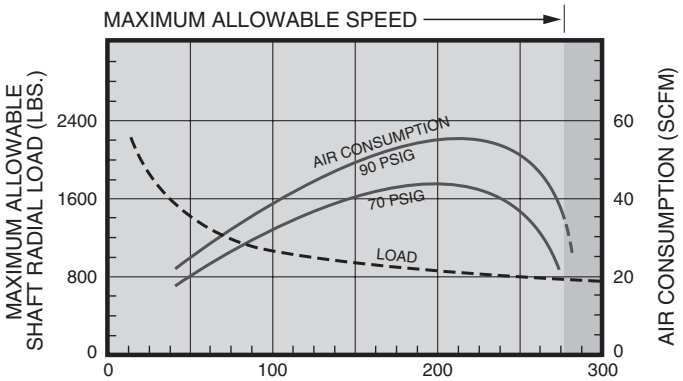

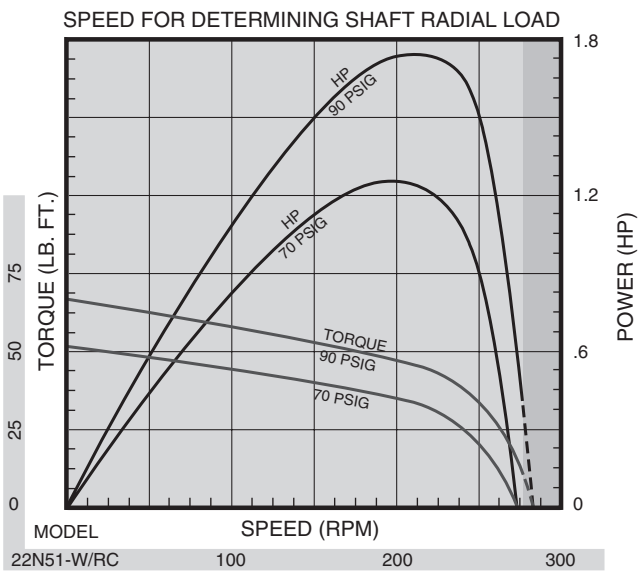

MODEL 22N51-W/RC DIMENSIONS

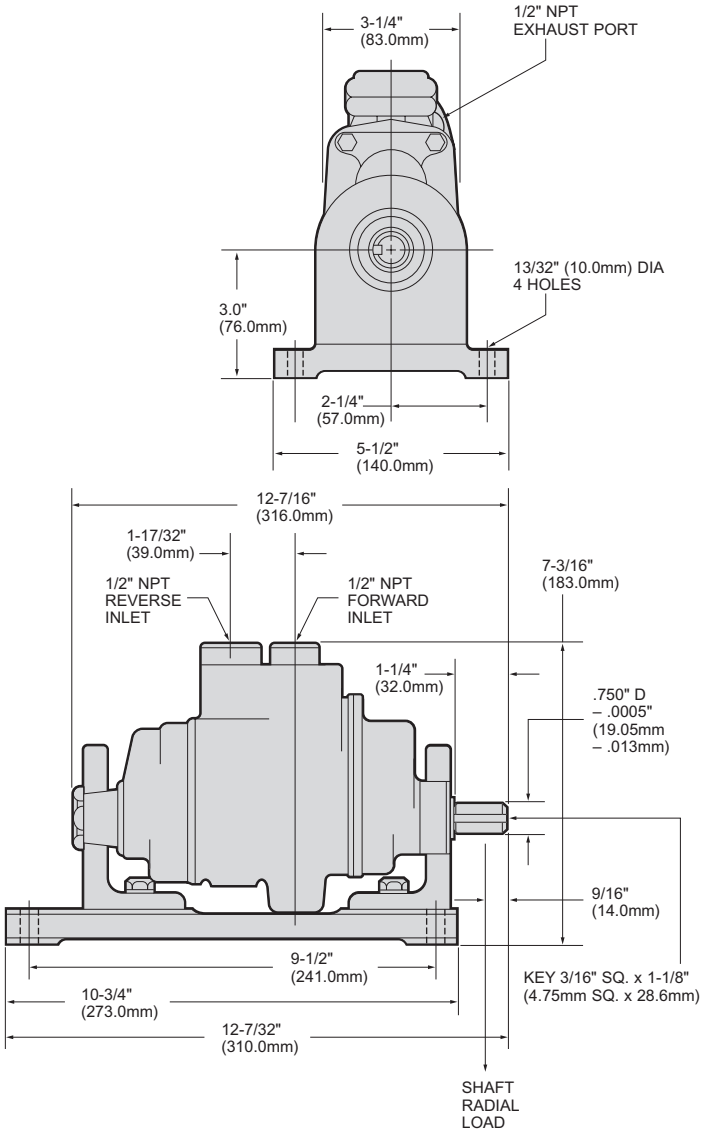

Series 551 Multi-Vane Air Motors

SPECIFICATIONS

Model	Max. Power		Speed at Max. Power	Free Speed▲	Starting Torque		Stall Torque		Air Consumption at Max. Power		Weight	
	hp	kw	rpm	rpm	lb.-ft.	Nm	lb.-ft.	Nm	scfm	m³/m	lb.	kg
Reversible												
551SM51-W/RC	5.6	4.18	95	120	400	542	545	739	160	4.53	93	42.2
551SO51-W/RC	5.6	4.18	59	77	650	881	885	1200	160	4.53	93	42.2

▲ALL models must be operated with sufficient load to prevent speed from exceeding maximum allowable speed shown on performance curve.
Performance figures are at 90 psig (620 kPa) air pressure.

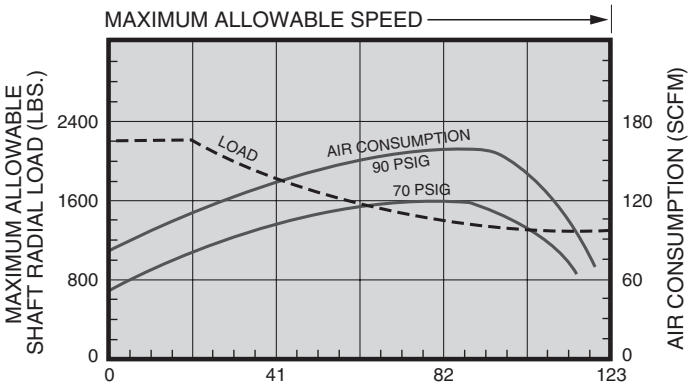

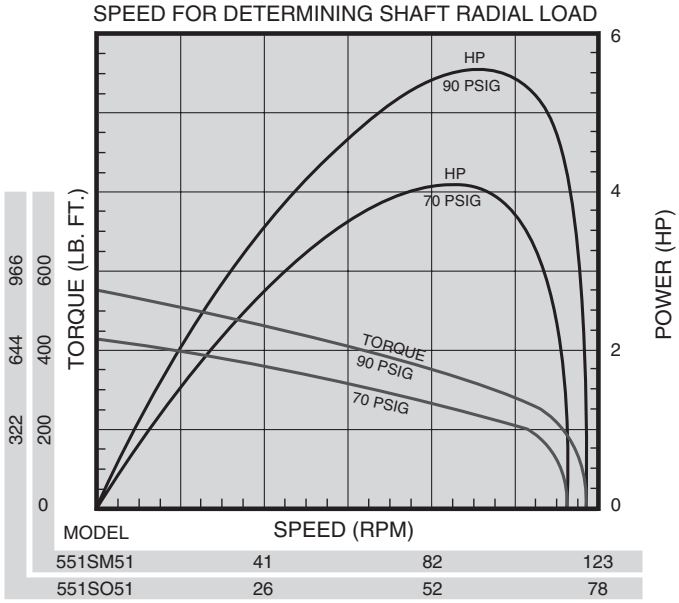

SERIES 551 DIMENSIONS

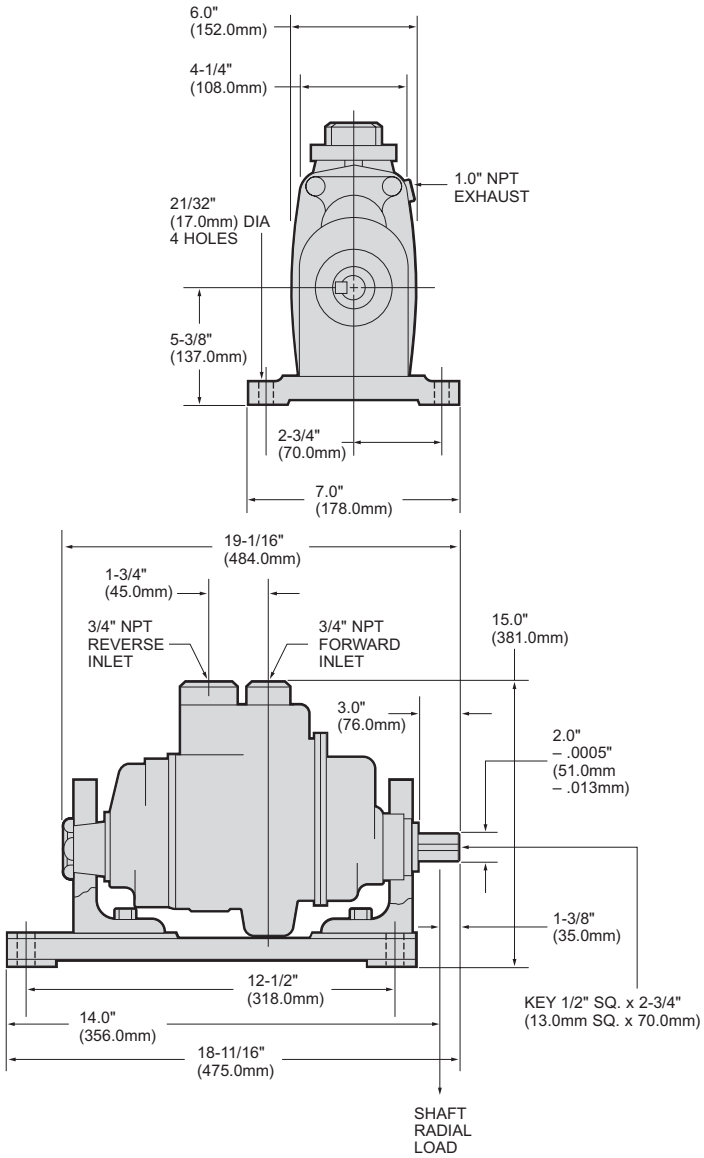

SPECIFICATIONS

Model	Max. Power		Speed at Max. Power	Free Speed▲	Starting Torque		Stall Torque		Air Consumption at Max. Power		Weight	
	hp	kw	rpm	rpm	lb.-ft.	Nm	lb.-ft.	Nm	scfm	m³/m	lb.	kg
Direct Drive Reversible												
CCM	2.05	1.53	1075	2140	13.2	17.9	18.8	25.5	97	2.7	135	61.2
DD6M	2.6	1.94	750	1490	24	32.5	34.2	46.4	79	2.2	135	61.2
EEM	4.4	3.28	735	1450	41	55.6	59	80	137	3.9	200	90.7
EE5M	7.8	5.82	950	1875	60	81.4	80.5	109.2	220	6.2	210	95.3
HHM	11.3	8.43	730	1450	106	144	152	206	270	7.6	235	107
HH5M	15.2	11.33	750	1500	146	198	195	264	400	11.3	250	113
KK6M	25	18.64	755	1500	260	353	325	441	680	19.3	475	216
Geared Drive Reversible												
EE3G	5	3.73	275	560	122	165	175	237	155	4.4	200	90.7
EE53G	6.8	5.07	305	600	154	209	205	278	220	6.2	220	99.8
EE9G	4.7	3.51	92	190	357	484	510	692	155	4.4	210	95.3
EE59G	6.5	4.85	100	200	450	610	600	814	220	6.2	230	104

▲ALL models must be operated with sufficient load to prevent speed from exceeding maximum allowable speed shown on performance curve.
All of the above motors are furnished less valve and piping as standard.
Performance figures are at 90 psig (620 kPa) air pressure.

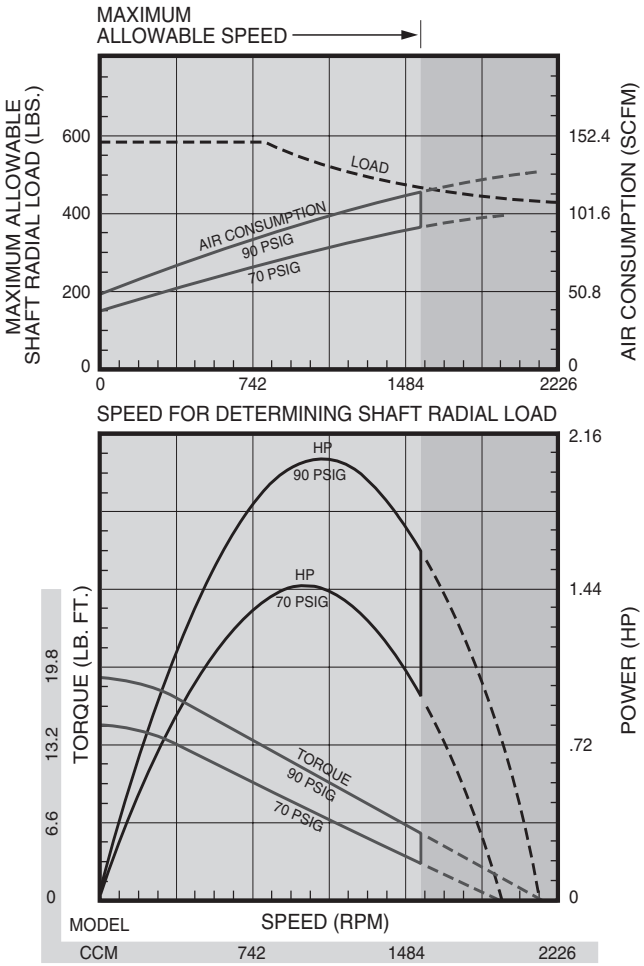

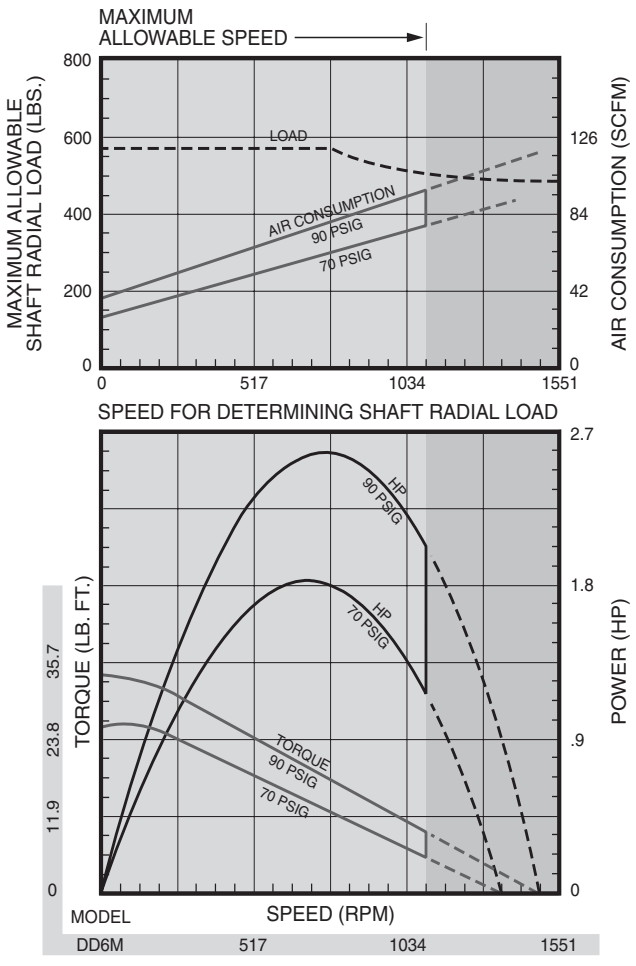

Direct and Geared Drive Piston Air Motors

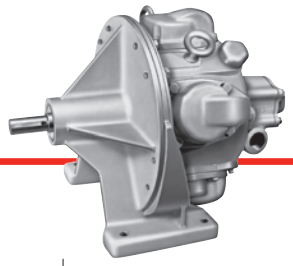

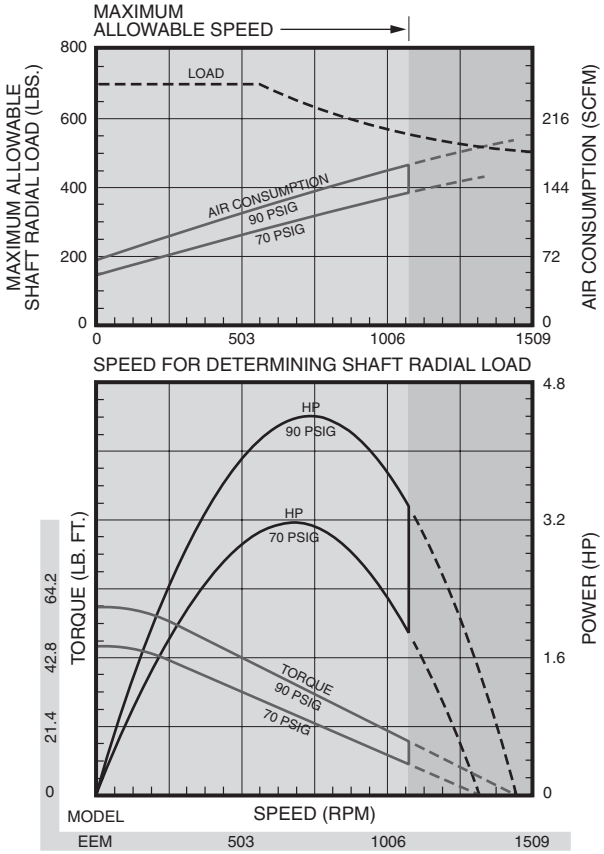

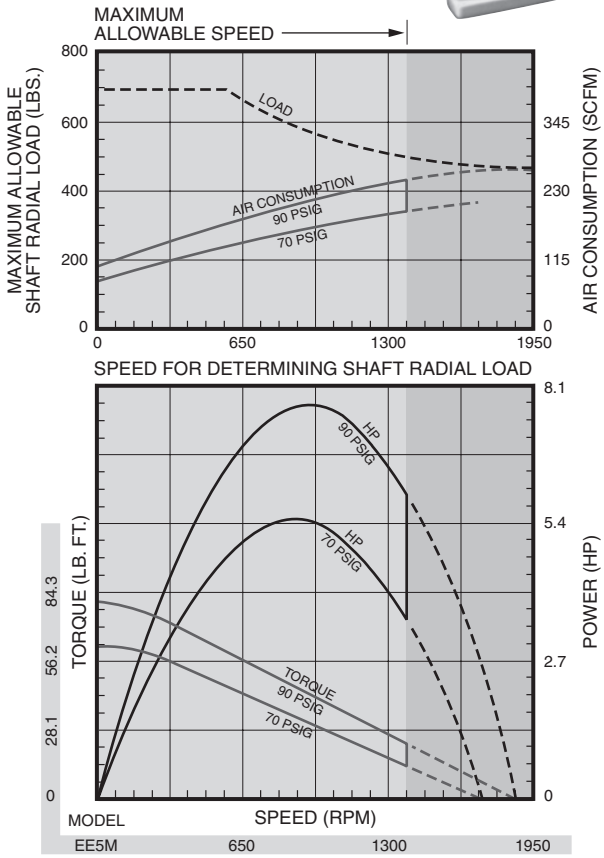

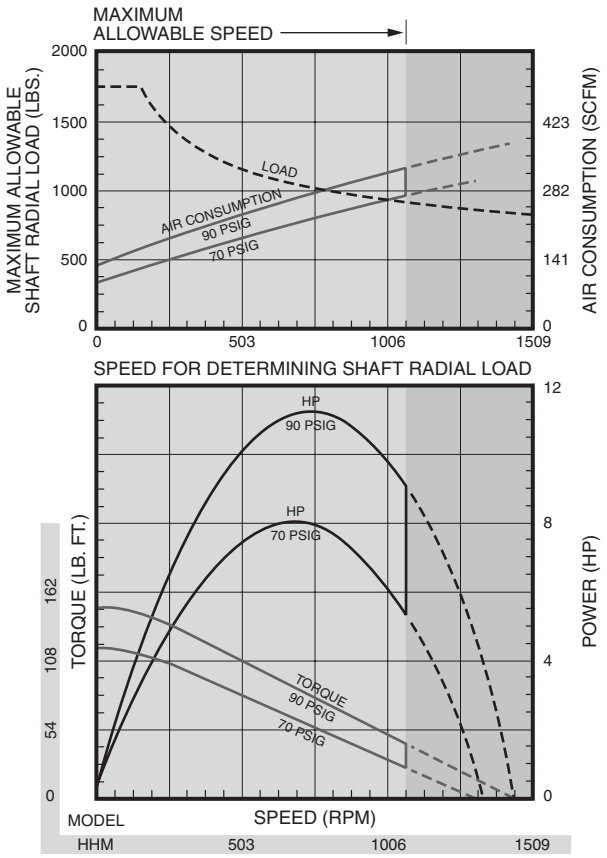

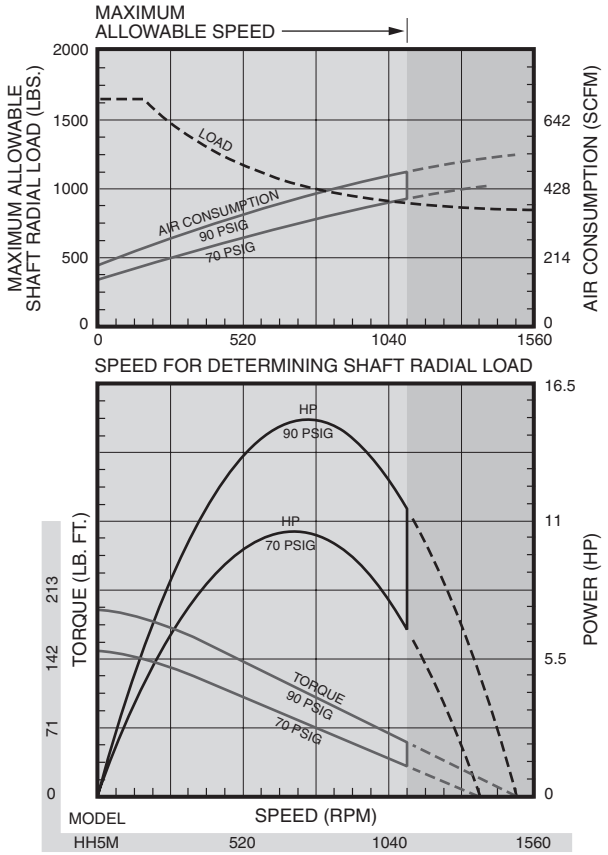
MAXIMUM
ALLOWABLE SPEED
MAXIMUM ALLOWABLE SHAFT RADIAL LOAD (LBS.)
2000
1500
1000
500
0
LOAD
AIR CONSUMPTION
90 PSIG
70 PSIG
642
428
214
0
AIR CONSUMPTION (SCFM)
0
520
1040
1560
SPEED FOR DETERMINING SHAFT RADIAL LOAD
HP
90 PSIG
HP
70 PSIG
TORQUE
90 PSIG
70 PSIG
TORQUE (LB. FT.)
213
142
71
0
16.5
11
5.5
0
POWER (HP)
MODEL
SPEED (RPM)
HH5M
520
1040
1560

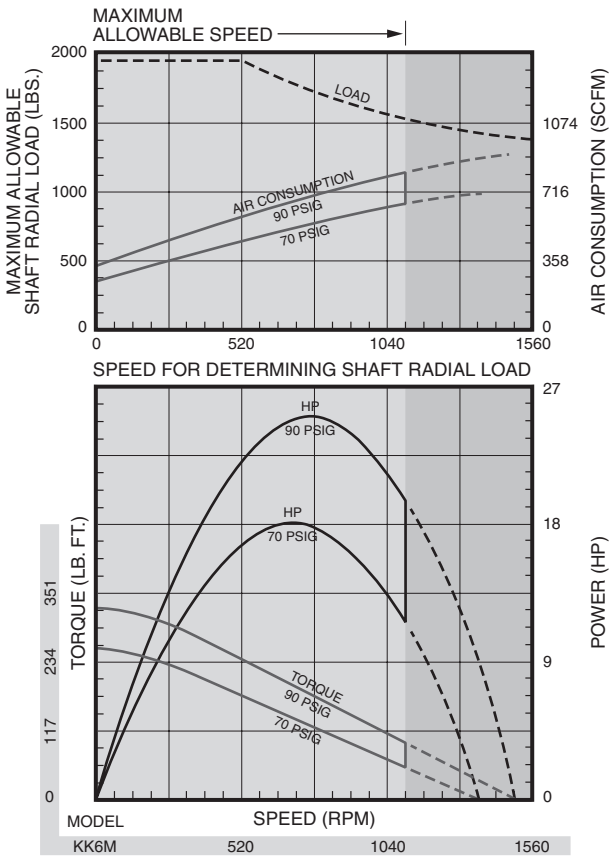
MAXIMUM
ALLOWABLE SPEED
MAXIMUM ALLOWABLE SHAFT RADIAL LOAD (LBS.)
2000
1500
1000
500
0
LOAD
AIR CONSUMPTION
90 PSIG
70 PSIG
1074
716
358
0
AIR CONSUMPTION (SCFM)
0
520
1040
1560
SPEED FOR DETERMINING SHAFT RADIAL LOAD
HP
90 PSIG
HP
70 PSIG
TORQUE
90 PSIG
70 PSIG
TORQUE (LB. FT.)
351
234
117
0
27
18
9
0
POWER (HP)
MODEL
SPEED (RPM)
KK6M
520
1040
1560

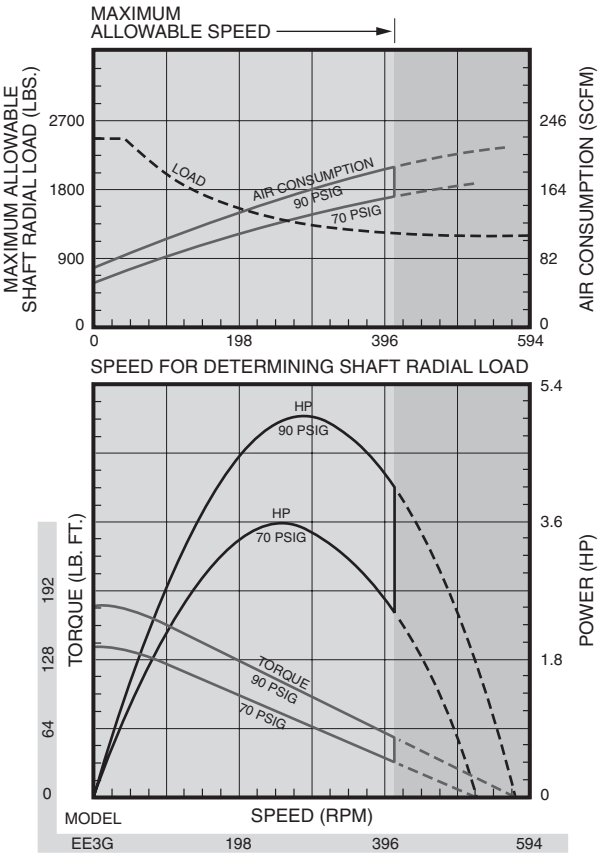
MAXIMUM
ALLOWABLE SPEED
MAXIMUM ALLOWABLE SHAFT RADIAL LOAD (LBS.)
2700
1800
900
0
LOAD
AIR CONSUMPTION
90 PSIG
70 PSIG
246
164
82
0
AIR CONSUMPTION (SCFM)
0
198
396
594
SPEED FOR DETERMINING SHAFT RADIAL LOAD
HP
90 PSIG
HP
70 PSIG
TORQUE
90 PSIG
70 PSIG
TORQUE (LB. FT.)
192
128
64
0
5.4
3.6
1.8
0
POWER (HP)
MODEL
SPEED (RPM)
EE3G
198
396
594

Direct and Geared Drive Piston Air Motors

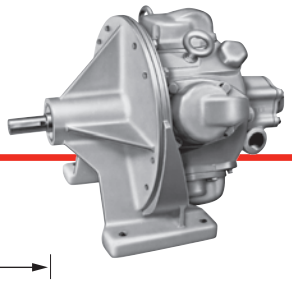

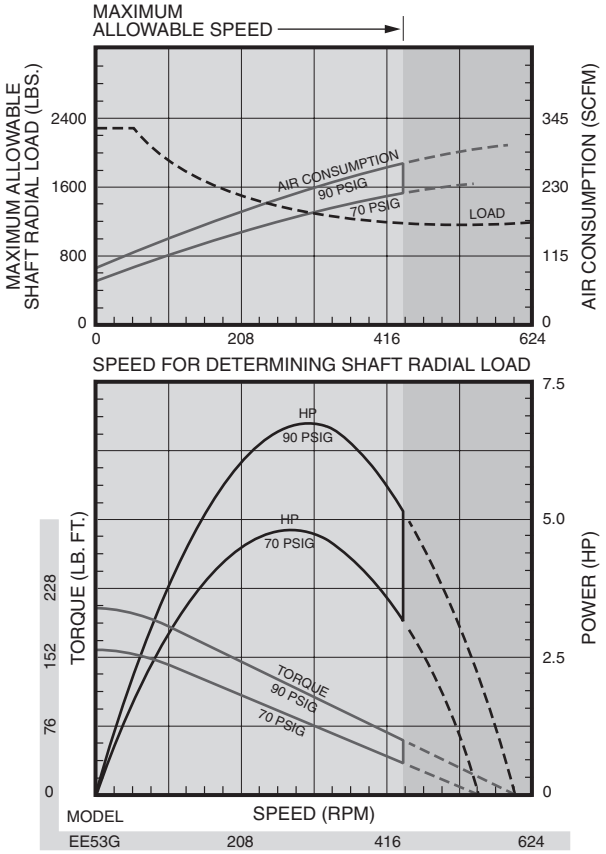

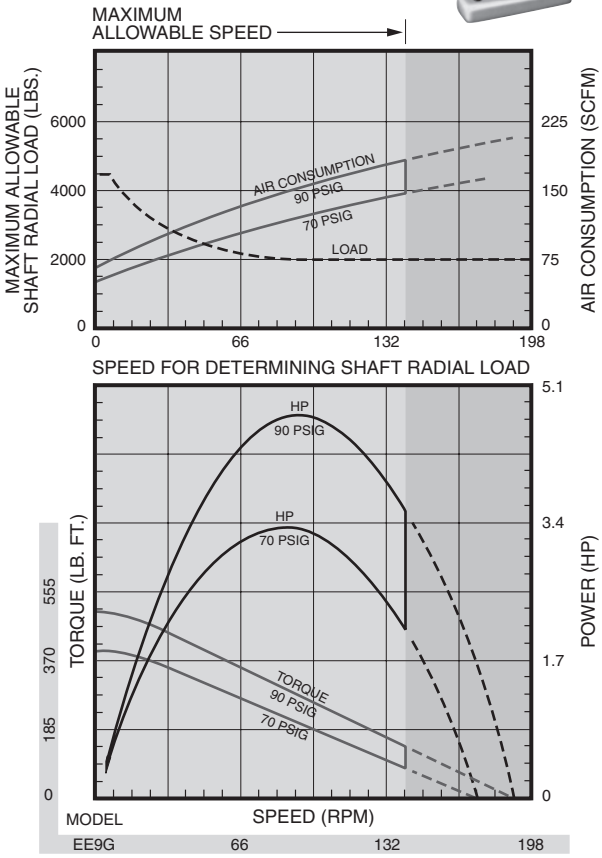

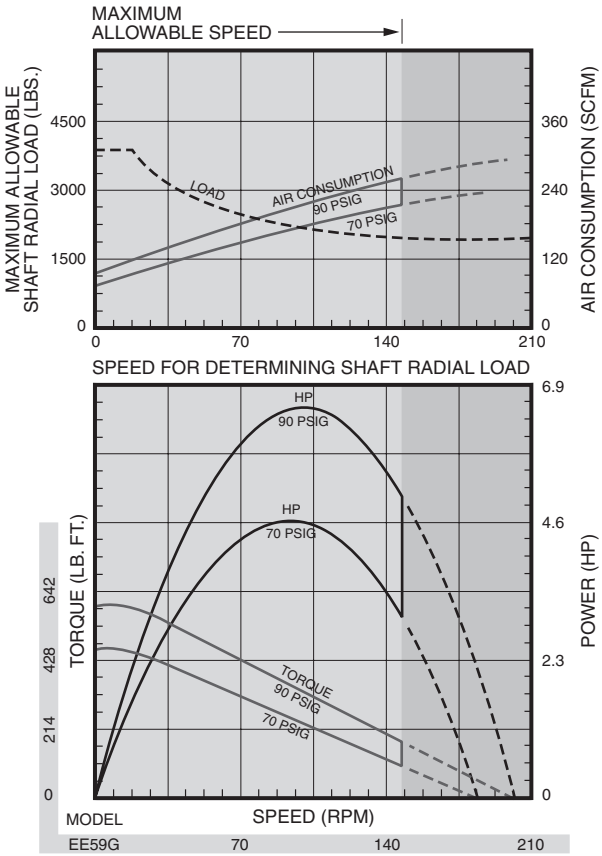

DIRECT DRIVE DIMENSIONS

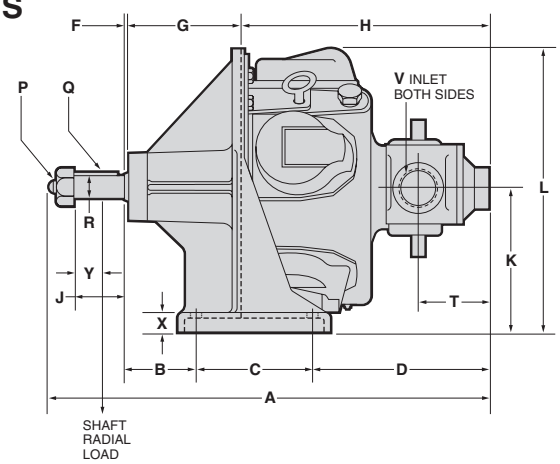

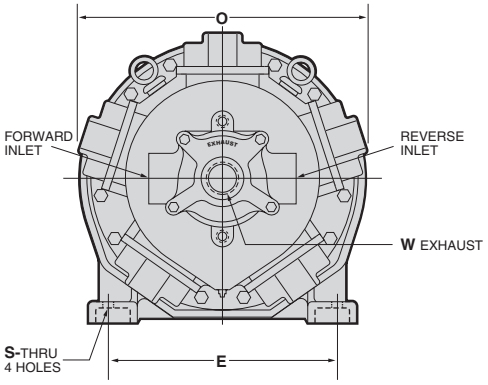

DIMENSIONS IN INCHES

Model	A	B	C	D	E	F	G	H	J	K	L	O	P** Thd.	Q Key	R*	S Dia.	T	V NPT	W NPT	X	Y
CCM, DD6M	23 9/16	3 3/4	7 3/4	7 7/8	10 1/2	25/32	7 13/32	11 3/16	3	8 3/4	15 5/8	13 3/4	1"-8	1/4 x 1/4	1.125	25/32	2 11/16	3/4	1	7/8	2 11/16
EEM, EE5M	27	3 13/16	9 3/4	9 9/32	12 1/2	25/32	9 17/32	12 17/32	3	9 5/16	16 13/16	15	1"-8	1/4 x 1/4	1.125	25/32	2 15/16	1	1	7/8	2 11/16
HHM	24 3/16	4 5/16	7	9 7/8	13 1/2	3/16	7	14	3	8 7/8	17 1/4	17 1/4	+	3/8 x 3/8	1.375	21/32	3 13/16	1	1 1/4	1 1/4	1 5/16
HH5M	24 3/16	4 5/16	7	9 7/8	13 1/2	3/16	7	14	3	8 7/8	17 1/4	17 1/4	+	3/8 x 3/8	1.375	21/32	3 13/16	1	1 1/4	1 1/4	1 5/16
KK6M	30 1/4	4 3/4	8 5/8	12 5/8	13 1/2	1/8	7 11/16	18 3/16	4 1/4	12 1/8	22 1/4	22	+	3/8 x 3/8	1.625	21/32	4 5/16	1 1/4	1 1/2	1 3/8	1 7/8

+ The end of the shaft is not threaded on these Motors and no nut is used. *Tolerance: +0 -.0005" **Thd.–UNC2A.

DIMENSIONS IN MILLIMETERS

Model	A	B	C	D	E	F	G	H	J	K	L	O	P Thd.	Q Key	R*	S Dia.	T	X	Y
CCM, DD6M	599	95	197	200	267	20	188	284	76	222	397	349	1"-8	6 x 6	28	20	68	22	68
EEM, EE5M	686	97	248	236	318	20	242	318	76	237	427	381	1"-8	6 x 6	28	20	75	22	68
HHM	614	110	178	251	343	5	178	356	76	225	438	438	+	10 x 10	35	17	97	32	33
HH5M	614	110	178	251	343	5	178	356	76	225	438	438	+	10 x 10	35	17	97	32	33
KK6M	768	121	219	321	343	3	195	462	108	308	565	559	+	10 x 10	41	17	110	35	48

+ The end of the shaft is not threaded on these Motors and no nut is used. *Tolerance: +0 -0.13mm

GEARED DRIVE DIMENSIONS

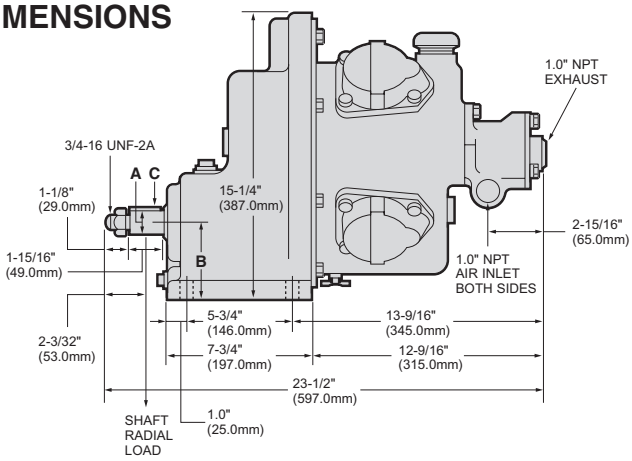

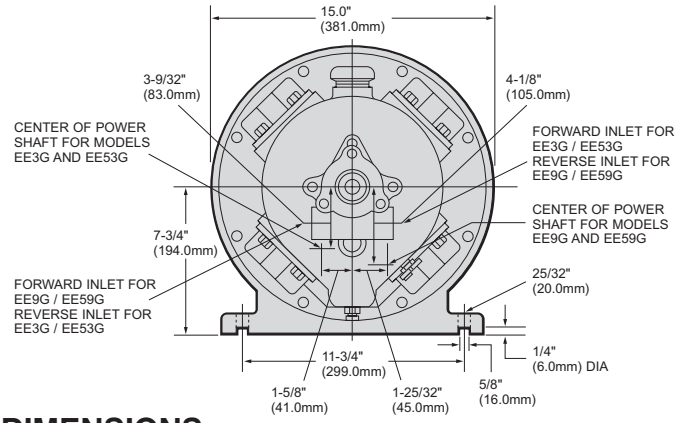

DIMENSIONS

MODELS	A*		B		KEY C	
	in.	mm	in.	mm	in.	mm
EE3G, EE53G	1.251	31.78	4 15/32	114	1/4 x 1/4 x 1 25/32	6 x 6 x 45
EE9G, EE59G	1.501	38.13	3 5/8	92	3/8 x 3/8 x 1 11/16	10 x 10 x 43

*Tolerance: +0 -.0005" (0.13mm)

MMP150 Air Motors

MODEL CODE EXPLANATION

Example: MMP150-A-0-B-2-A — **MMP150 - A 0 B 2 A**

Series: **MMP150 Air Motor**

Interface/Shaft Options:
- **A = Standard Spline**
- B = NEMA 215TC
- C = Hydraulic SAE "B" Adapter
- D = Keyed Shaft (Fenner RM410)

Mounting Options:
- **0 = Standard**
- 1 = Base Mount

Control Options:
- **A = None**
- B = Manual Valve
- C = Panel Mount Valve
- D = Pendant
- E = Accu-Trol™

Rotary Valve Bias Options:
- 1 = CCW (counter-clockwise), Standard Bias Rotation*
- **2 = CW (clockwise), Reverse Bias Rotation***

Power Options:
- **A = Air**
- B = Natural Gas

*As viewed from crankshaft end of motor.

PERFORMANCE

Model	Max. Power		Speed at Max. Power	Free Speed	Starting Torque		Stall Torque		Air Consumption at Max. Power	
	hp	kw	rpm	rpm	lb.-ft.	Nm	lb.-ft.	Nm	scfm	m^3/m
MMP 150	16.0	11.9	1800	3800	61.0	82.7	78.0	105.8	425	12.0

Performance figures are at 90 psig (6.2 Bar) air pressure.

Figure 1: MMP150 Air Motor Performance
425 cfm Air Supply at 90 psi

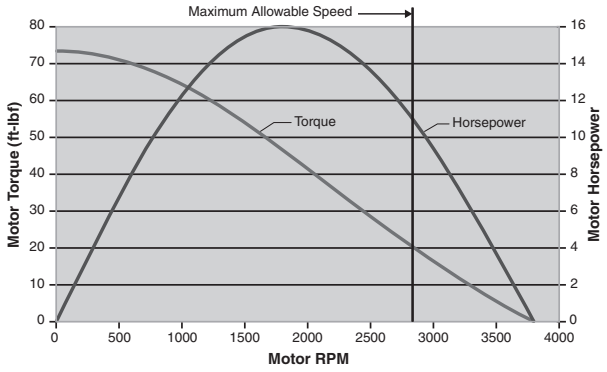

Figure 2: MMP150 Air Motor Performance

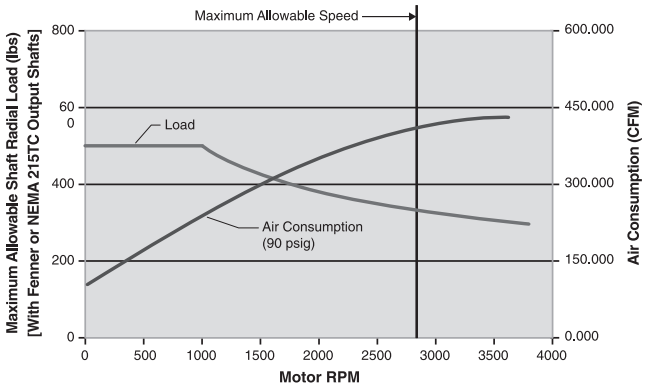

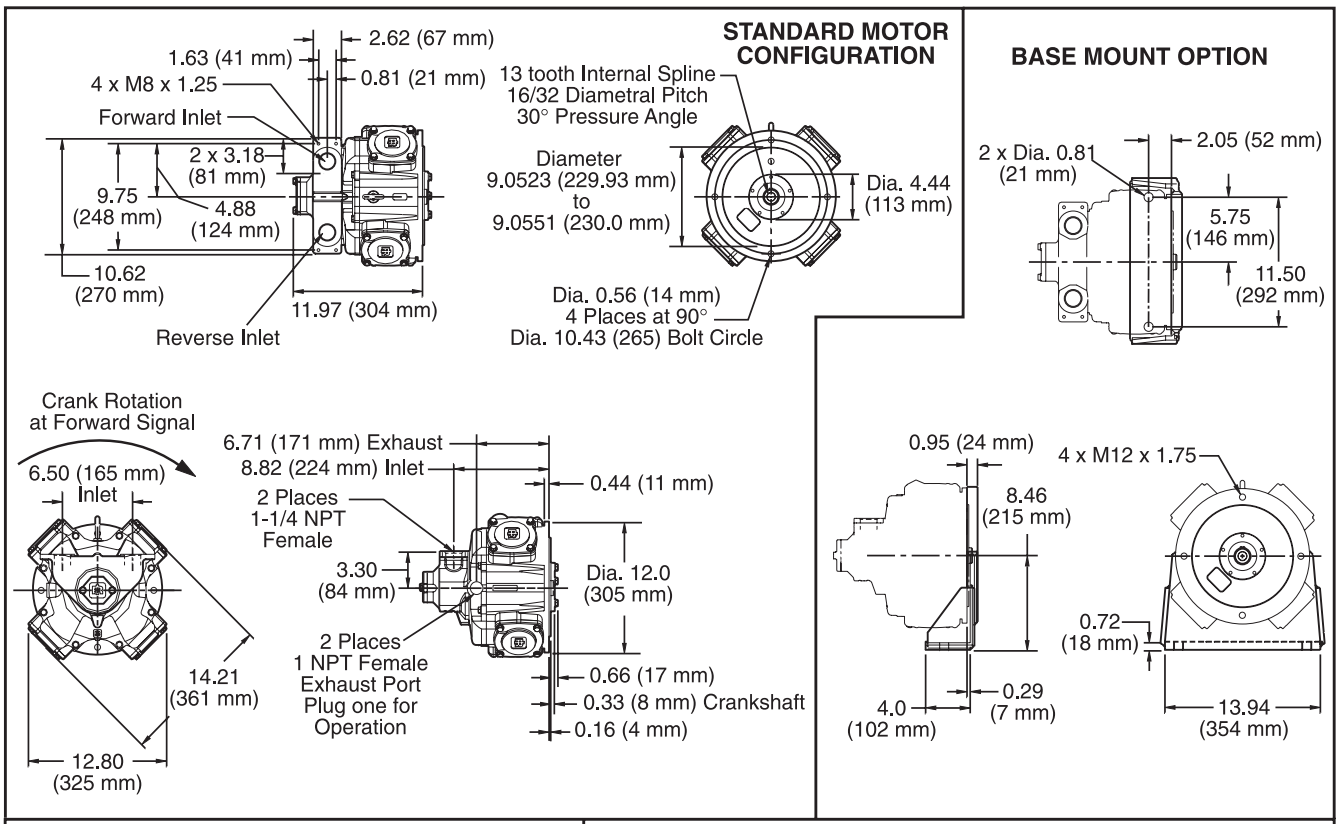
STANDARD MOTOR CONFIGURATION
2.62 (67 mm)
1.63 (41 mm)
0.81 (21 mm)
4 x M8 x 1.25
Forward Inlet
2 x 3.18 (81 mm)
9.75 (248 mm)
4.88 (124 mm)
10.62 (270 mm)
11.97 (304 mm)
Reverse Inlet
13 tooth Internal Spline
16/32 Diametral Pitch
30° Pressure Angle
Diameter 9.0523 (229.93 mm) to 9.0551 (230.0 mm)
Dia. 4.44 (113 mm)
Dia. 0.56 (14 mm)
4 Places at 90°
Dia. 10.43 (265) Bolt Circle
BASE MOUNT OPTION
2 x Dia. 0.81 (21 mm)
2.05 (52 mm)
5.75 (146 mm)
11.50 (292 mm)
Crank Rotation at Forward Signal
6.50 (165 mm) Inlet
14.21 (361 mm)
12.80 (325 mm)
6.71 (171 mm) Exhaust
8.82 (224 mm) Inlet
0.44 (11 mm)
2 Places 1-1/4 NPT Female
3.30 (84 mm)
Dia. 12.0 (305 mm)
2 Places 1 NPT Female Exhaust Port Plug one for Operation
0.66 (17 mm)
0.33 (8 mm) Crankshaft
0.16 (4 mm)
0.95 (24 mm)
8.46 (215 mm)
4.0 (102 mm)
0.29 (7 mm)
4 x M12 x 1.75
0.72 (18 mm)
13.94 (354 mm)

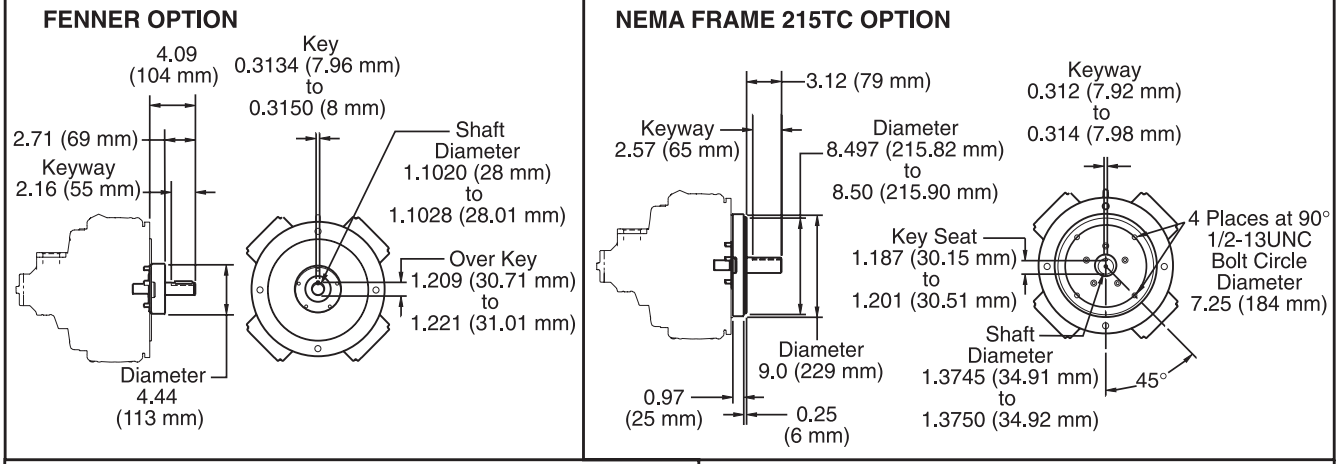
FENNER OPTION
4.09 (104 mm)
Key 0.3134 (7.96 mm) to 0.3150 (8 mm)
2.71 (69 mm)
Keyway 2.16 (55 mm)
Shaft Diameter 1.1020 (28 mm) to 1.1028 (28.01 mm)
Over Key 1.209 (30.71 mm) to 1.221 (31.01 mm)
Diameter 4.44 (113 mm)
NEMA FRAME 215TC OPTION
3.12 (79 mm)
Keyway 2.57 (65 mm)
Diameter 8.497 (215.82 mm) to 8.50 (215.90 mm)
Keyway 0.312 (7.92 mm) to 0.314 (7.98 mm)
Key Seat 1.187 (30.15 mm) to 1.201 (30.51 mm)
4 Places at 90° 1/2-13UNC Bolt Circle Diameter 7.25 (184 mm)
Diameter 9.0 (229 mm)
Shaft Diameter 1.3745 (34.91 mm) to 1.3750 (34.92 mm)
45°
0.97 (25 mm)
0.25 (6 mm)

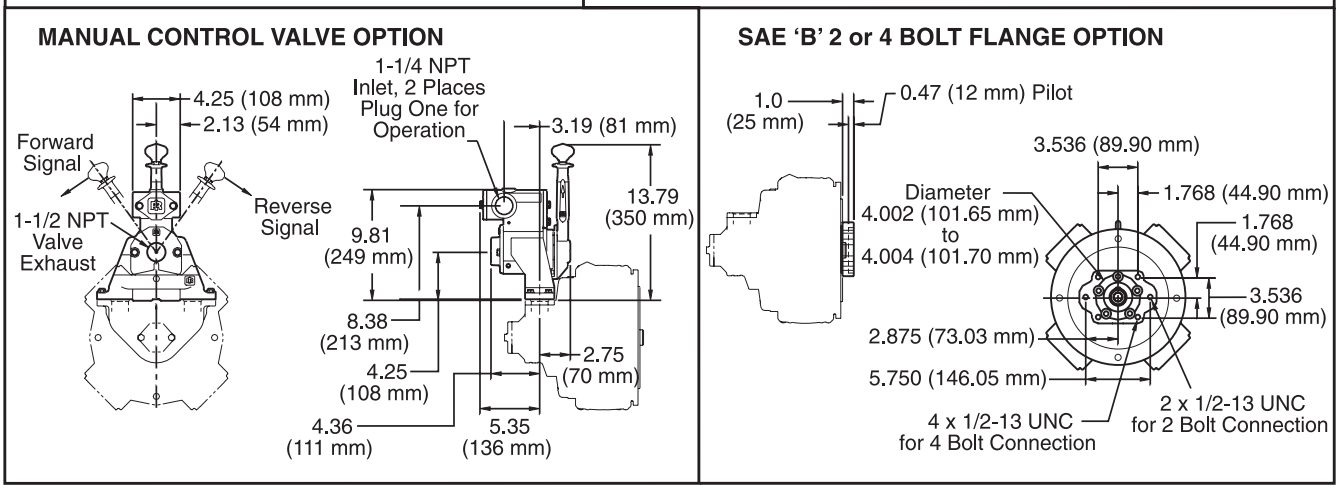
MANUAL CONTROL VALVE OPTION
4.25 (108 mm)
2.13 (54 mm)
Forward Signal
Reverse Signal
1-1/2 NPT Valve Exhaust
1-1/4 NPT Inlet, 2 Places Plug One for Operation
3.19 (81 mm)
13.79 (350 mm)
9.81 (249 mm)
8.38 (213 mm)
4.25 (108 mm)
2.75 (70 mm)
4.36 (111 mm)
5.35 (136 mm)
SAE 'B' 2 or 4 BOLT FLANGE OPTION
1.0 (25 mm)
0.47 (12 mm) Pilot
3.536 (89.90 mm)
Diameter 4.002 (101.65 mm) to 4.004 (101.70 mm)
1.768 (44.90 mm)
1.768 (44.90 mm)
3.536 (89.90 mm)
2.875 (73.03 mm)
5.750 (146.05 mm)
4 x 1/2-13 UNC for 4 Bolt Connection
2 x 1/2-13 UNC for 2 Bolt Connection

KK5B Piston Air Motors

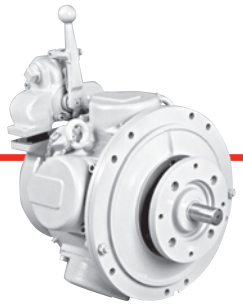

SPECIFICATIONS

Model	Max. Power		Speed at Max. Power	Free Speed▲	Starting Torque		Stall Torque		Air Consumption at Max. Power		Weight	
	hp	kw	rpm	rpm	lb.-ft.	Nm	lb.-ft.	Nm	scfm	m³/m	lb.	kg
Reversible												
KK5B546	29	21.6	900	1800	183	248	300	407	795	22.5	—	—
KK5B550	30	22.3	880	1750	202	274	325	441	850	24.1	—	—

▲ALL models must be operated with sufficient load to prevent speed from exceeding maximum allowable speed shown on performance curve.
Performance figures are at 90 psig (620 kPa) air pressure.

KK5B550 – STD ROTARY VALVE

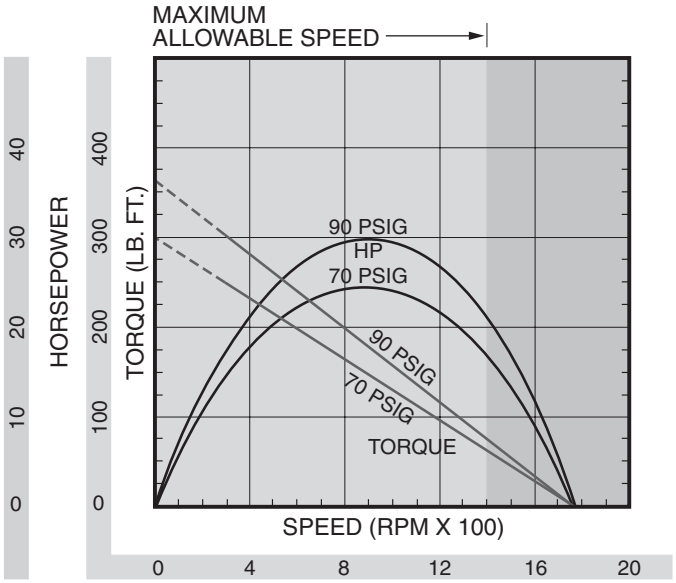

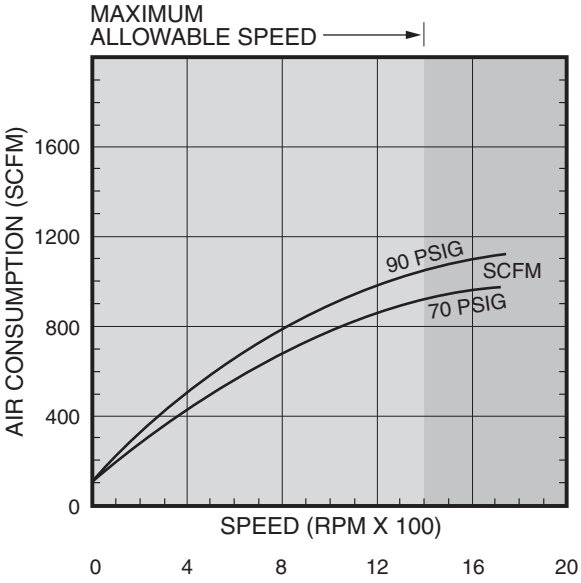

KK5B546 – STD ROTARY VALVE

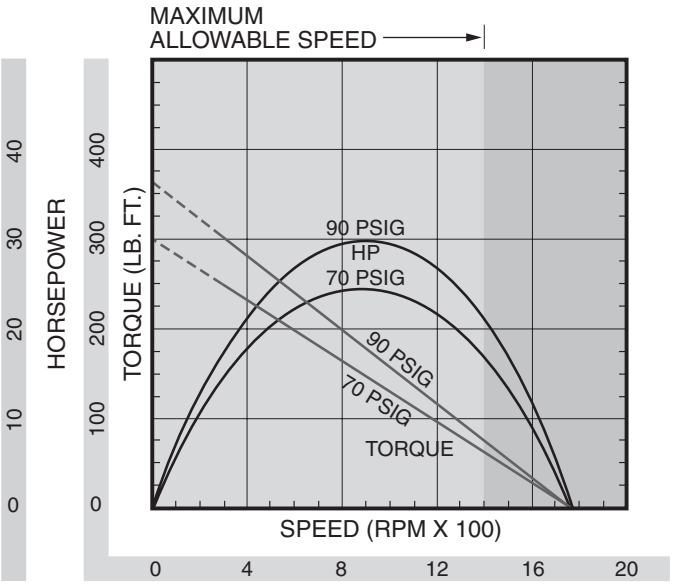

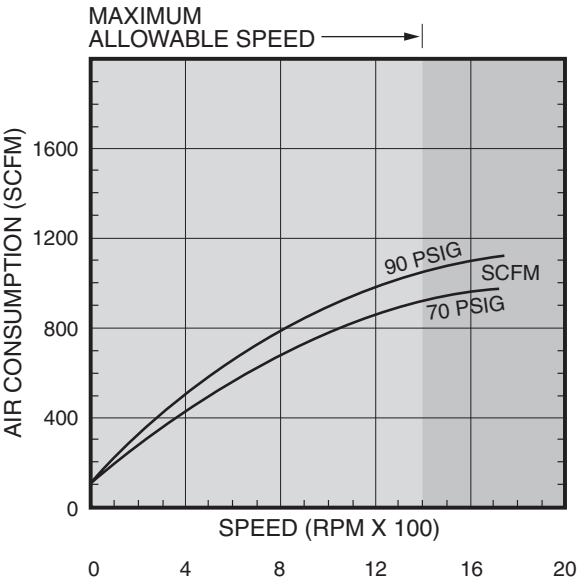

KK5B
MODEL NUMBER SYMBOLIZATION

KK5B550 _ B _ 0 _ C _ 2 _ A

- KK5B550 – Motorsize Options
- B – Mounting Options
- 0 – Output Shaft Options
- C – Control Options
- 2 – Controller Options
- A – Rotary Valve Options

EXAMPLE

KK5B550-B2B0A

- Rotary Valve Option **A** – Equal Powered
- Controller Option **0** – None
- Control Option **B** – Manual Throttle
- Output Shaft Option **2** – Keyed Shaft 1⅝" Dia.
- Mounting Option **B** – Base Mount
- Motor Option **550** – 30 HP Motor

Option	Code	Description	Weight lb.	Weight kg	Part Number
Motor Options	546	29 Horsepower Motor	251	113	KK5B546
	550	30 Horsepower Motor	251	113	KK5B550
Mounting Options	A	Flange Mount, STD with SAE C 2 & 4 Bolt Mount			Standard
	B	Base Mount, Stationary Mounting	45	20	K5B - Foot
Output Shaft Options	0	*SAE C, STD with SAE C 14 Tooth Female Spline Input			Standard
	1	**NEMA 213TC and 215TC, Keyed Shaft 1⅜" dia.	13	6	K5B - NEMA - 213
	2	***Keyed Shaft 1⅝" dia.	24	11	K5B - Shaft - 1.625
Control Options	A	None			Standard
	B	Manual Throttle, Control Mounted Directly on Motor	19	19	K5B - Manual
	C	Pilot Air Control, Required for Remote Controller Options	9	4	K5B - Pilot
Controller Options	0	None			Standard
	1	Pendant Control, STD 2 Button Pendant			MLK-K269C
	2	Panel Control, Required for Remote Stationery Mounted Control			UWD - A686
Rotary Valve Options	A	Equal Powered			Standard
	B	Biased Powered CCW			POA
	C	Biased Powered CW			POA

*Flange Gasket Required **Single Bearing Mount ***Double Bearing Mount

EXAMPLE KK5B550 - B2A0A ARRANGEMENT

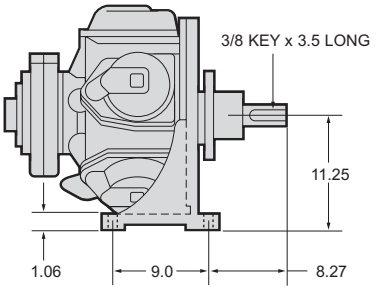

KK5B MOTOR

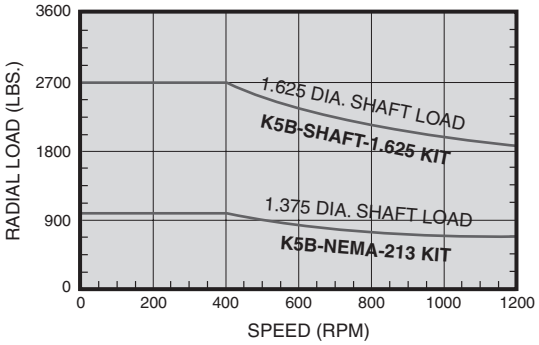

KK5B Piston Air Motors

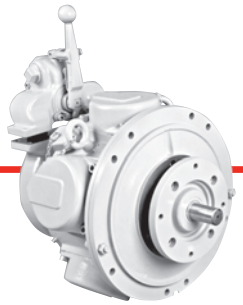

KK5B PISTON AIR MOTOR

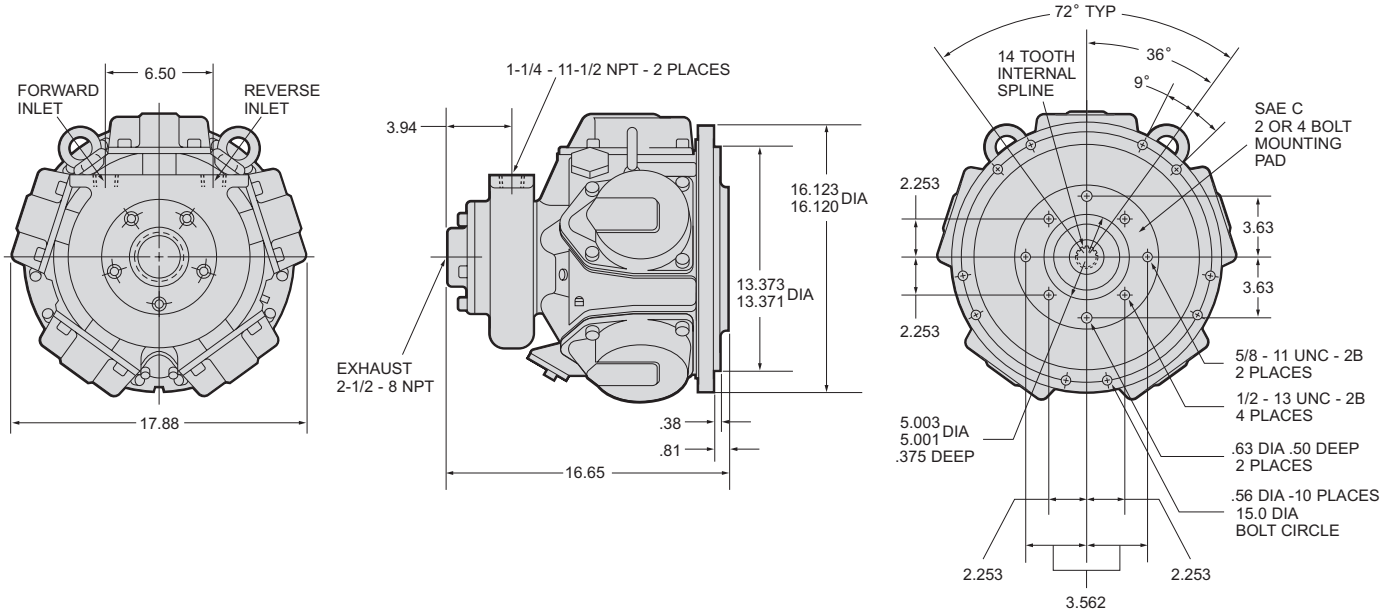

TOP AND SIDE VIEWS

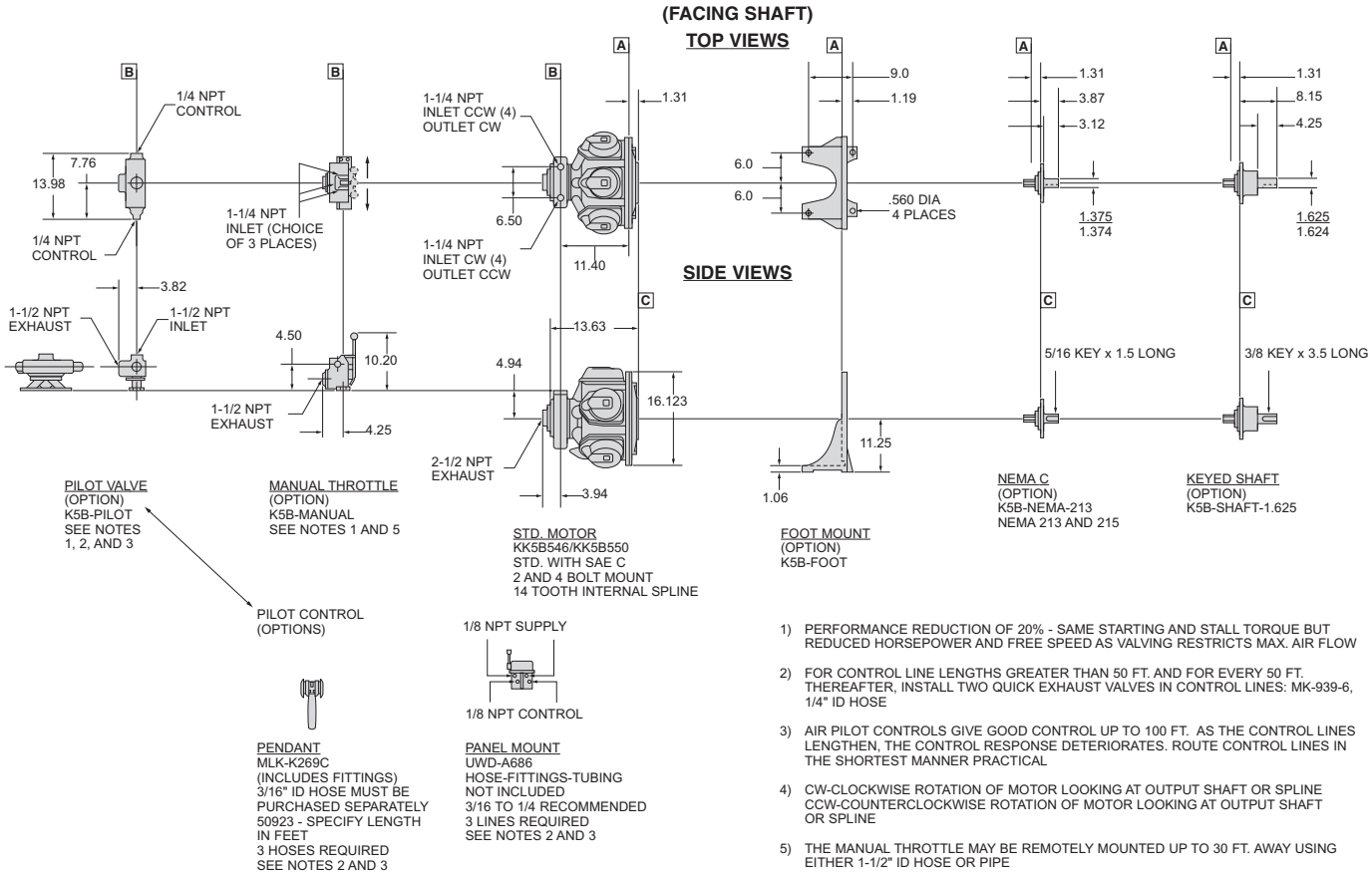

1) PERFORMANCE REDUCTION OF 20% - SAME STARTING AND STALL TORQUE BUT REDUCED HORSEPOWER AND FREE SPEED AS VALVING RESTRICTS MAX. AIR FLOW

2) FOR CONTROL LINE LENGTHS GREATER THAN 50 FT. AND FOR EVERY 50 FT. THEREAFTER, INSTALL TWO QUICK EXHAUST VALVES IN CONTROL LINES: MK-939-6, 1/4" ID HOSE

3) AIR PILOT CONTROLS GIVE GOOD CONTROL UP TO 100 FT. AS THE CONTROL LINES LENGTHEN, THE CONTROL RESPONSE DETERIORATES. ROUTE CONTROL LINES IN THE SHORTEST MANNER PRACTICAL

4) CW-CLOCKWISE ROTATION OF MOTOR LOOKING AT OUTPUT SHAFT OR SPLINE CCW-COUNTERCLOCKWISE ROTATION OF MOTOR LOOKING AT OUTPUT SHAFT OR SPLINE

5) THE MANUAL THROTTLE MAY BE REMOTELY MOUNTED UP TO 30 FT. AWAY USING EITHER 1-1/2" ID HOSE OR PIPE

FILTERS, REGULATORS AND LUBRICATORS

Ingersoll-Rand and ARO Filters, Regulators and Lubricators give increased Motor performance, reduce repair costs and extend Motor life.

Filters

For Motors	Part No.	NPT Size	Flow Rate scfm	Bowl Cap. oz.	Height in.	Width in.	Depth in.
Series M002, M004, M007, Models MRV003, MOV005AA	F25221-400	¼"	54	2.87	7.00	2.60	2.60
Model MVA008B, Series 1801, 1841	F25231-400	⅜"	100	2.87	7.00	2.60	2.60
Models MRV015, MVA017A, MVA017B, Series 3800, 3840, 4800, 4840, 17RA, 17RB, 48RA, 48RB, Models 22N51, AAM	F25241-400	½"	122	2.87	7.00	2.60	2.60
Models MRV040, MRV050, MVA034A, MVA034B, Series 34RA, 34RB, 551, Models CCM, DD6M	F25451-110	¾"	345	32.00	11.70	4.75	4.75
Model MOV075AA, Series 92RA, 92RB, 92RM, 992RM, Models EEM, EE5M, HHM, EE3G, EE9G, EE53G, EE59G	F25461-110	1"	345	32.00	11.70	4.75	4.75
Models HH5M, KK6M	F42-0A-000	1¼"	860	13.00	14⅞"	8½"	8½"
Models KK5B546, KK5B550	F35-0B-C28	1½"	1280	12.50	19.07	7.80	7.75

Regulators

For Motors	Part No.	NPT Size	Flow Rate scfm	Adj. Pressure Range psi	Height in.	Width in.	Depth in.
Series M002, M004, M007, Models MRV003, MOV005AA	R27221-600	¼"	100	5 - 125	4.75	2.60	2.60
Series 1801, 1841	R27231-600	⅜"	130	5 - 125	4.75	2.60	2.60
Models MRV015, MVA017A, MVA017B, Series 3800, 3840, 4800, 4840, 17RA, 17RB, 48RA, 48RB, Models 22N51, AAM	R27241-600	½"	150	5 - 125	4.75	2.60	2.60
Models MRV040, MRV050 Series 551, Models CCM, DD6M	R27451-100	¾"	180	5 - 125	7.10	4.25	4.25
Models MVA034A, MVA034B, Series 34RA, 34RB	R38-06-F0G0-28	¾"	491	10 - 125	7.83	3.94	3.94
Model MOV075AA, Series 92RA, 92RB, 92RM, 992RM, Models EEM, EE5M, HHM, EE3G, EE9G, EE53G, EE59G	R38-08-F0G0-28	1"	491	10 - 125	7.83	3.94	3.94
Models HH5M, KK6M	R30-0A-G00	1¼"	800	10 - 125	10.30	2.62	4.30
Models KK5B546, KK5B550	R40-0B-G00	1½"	1200	10 - 125	11.90	5.30	3.60

Lubricators

For Motors	Part No.	NPT Size	Flow Rate scfm	Bowl Cap. oz.	Height in.	Width in.	Depth in.
Series M002, M004, M007, Models MRV003, MOV005AA	L26221-100	¼"	75	6.00	7.70	2.60	2.60
Series 1801, 1841	L26231-100	⅜"	100	6.00	7.70	2.60	2.60
Models MVA017A, MVA017B, Series 17RA, 17RB,	L26241-100 * ½" connection	½"	110	6.00	7.70	2.60	2.60
Models MRV015, 22n51-W/RC, Series 3800, 3840	L28-04-LK00-28	½"	184	6.11	9.36	2.39	2.39
Models MRV040, MRV050, MVA034A, MVA034B, Series 34RA, 34RB, 551, Models CCM, DD6M	L28-06-LK00-28	¾"	200	6.11	9.36	2.90	2.90
Model MOV075AA, Series 92RA, 92RB, 92RM, 992RM, Models EEM, EE5M, HHM, EE3G, EE9G, EE53G, EE59G	L38-08-LL00-28	1"	440	19.00	10.67	3.94	3.94
Models HH5M, KK6M	L40-0A-000	1¼"	927	26.00	11.61	5.50	5.00
Models KK5B546, KK5B550	L40-0B-000	1½"	927	26.00	11.61	5.50	5.00

Components and Equipment

Combination FRL's (Filter/Regulator/Lubricator)

For Motors	Part No.	NPT Size	Flow Rate scfm	Adj. Pressure Range psi	Bowl Capacity oz.	Height in.	Width in.	Depth in.
Series M002, M004, M007, Models MRV003, MOV005AA	C28221-800	¼"	54	5 - 125	Filter = 2.87 Lubricator = 6.00	8.25	9.43	4.00
Series 1801, 1841	C28231-800	⅜"	100	5 - 125	Filter = 2.87 Lubricator = 6.00	8.25	9.43	4.00
Models MRV015, 22N51 Series 3800, 3840, 17RA, 17RB	C28241-800	½"	110	5 - 125	Filter = 2.87 Lubricator = 6.00	8.25	9.43	4.00
Models MVA017A, MVA017B, Series 4800, 4840, 48RA, 48RB, 17RA, 17RB,	C28-04-FKG0-28	½"	135	5 - 125	Filter = 2.87 Lubricator = 6.11	11.44	6.10	4.35
Models MRV040, MRV050, Series 551, Models CCM, DD6M	C28453-810	¾"	180	0 - 125	Filter = 32.0 Lubricator = 32.0	15.25	11.75	11.75
Model MVA034A, MVA034B, 34RA, 34RB	Must use individual units or 1" model	¾"	—	—	—	—	—	—
Model MOV075AA, Series 92RA, 92RB, 92RM, 992RM, Models EEM, EE5M, HHM, EE3G, EE9G, EE53G, EE59G	C31-08-G00	1"	331	10 - 125	Filter = 2.0 Lubricator = 26.0	11.20	15.30	5.70

LIQUIDATOR FILTERS

You can depend on Ingersoll-Rand and ARO Liquidator Filters™ when you need clean, dry air and your regular filter can't handle high volumes of liquid contaminants. Note that a lubricator should be installed between the Air Motor and the Liquidator.

Features

Two stage filtration cartridges remove 99% of liquid contaminants. One micron filter element removes 99% of all dirt particles 1 micron or larger. Quick release bowls enable easy cartridge replacement. Automatic float drain with manual override. Clear polycarbonate bowl with metal guard provides for quick inspection.

Benefits

Reduces liquid contaminants.
Increases Air Motor life.
Cuts maintenance costs.

Liquidator Filters / Filters

Female NPT	IR Part Number	Flow Rate scfm	Female NPT	ARO Part Number	Flow Rate scfm
¼"	8842-W1-035	35	¼"	F25221-300	40
⅜"	8843-W1-035	35	⅜"	F25231-300	51
½"	8844-W1-090	90	½"	F25241-300	53
¾"	8846-W1-090	90	¾"	F25452-310	50
1"	8828-W2-000*	175	1"	F25462-310	150
1¼"	8830-W1-000	400	1¼"	F25472-310	150
2"	8834-W1-000	700	—	—	

*Two seperate canisters

LUBRICATION

Proper lubrication of Air Motors is a must to prevent excessive wear of moving parts; to prevent possible rust and corrosion of bare, unprotected surfaces. Ingersoll-Rand oils and greases have been tested thoroughly and are recommended without reservation. Refer to Operation Manuals and Parts Lists for lubrication instructions.

Oils

Part Number	Oil Number	Quantity	Recommended Use
10P 10G	10 10	1 pt 1 gal	Fractional horsepower Air Motors
50P 50G	50 50	1 pt 1 gal	One horsepower and larger Air Motors

Greases

Part Number	Grease Number	Quantity lb.	Recommended Use
28 1 LB 28 8 LB	28 28	1 8	Motor gearing and bearings

Filters

For Motors	Part No.	NPT Size	Flow Rate scfm	Bowl Cap. oz.	Height in.	Width in.	Depth in.
Series 0000, 000	F25111-200	1/8"	28	0.60	3.41	2.00	1.75
Series 0, 2200	F25221-400	1/4"	54	2.87	7.00	2.60	2.60
Series 44	F25231-400	3/8"	100	2.87	7.00	2.60	2.6

Regulators

For Motors	Part No.	NPT Size	Flow Rate scfm	Adj. Pressure Range psi	Height in.	Width in.	Depth in.
Series 0000	R27111-100	1/8"	13	0 - 125	4.00	2.00	1.75
Series 000 * Use 1/4" Regulator	R27221-600	1/4"	100	0 - 125	4.75	2.60	2.60
Series 0, 2200	R27221-600	1/4"	100	0 - 125	4.75	2.60	2.60
Series 44	R27231-600	3/8"	130	0 - 125	4.75	2.60	2.60

Lubricators

For Motors	Part No.	NPT Size	Flow Rate scfm	Bowl Cap. oz.	Height in.	Width in.	Depth in.
Series 0000, 000	L26111-100	1/8"	41	1.10	5.16	2.00	1.75
Series 0, 2200	L26221-100	1/4"	75	6.00	7.70	2.60	2.60
Series 44	L26231-100	3/8"	100	6.00	7.70	2.60	2.60

Combination FRL's (Filter/Regulator/Lubricator)

For Motors	Part No.	NPT Size	Flow Rate scfm	Adj. Pressure Range psi	Bowl Capacity oz.	Height in.	Width in.	Depth in.
Series 0000	C28121-800	1/8"	13	5 - 125	Filter = 0.60 Lubricator = 1.10	6.26	4.00	3.63
Series 000 * Use 1/4" FRL	C28221-800	1/4"	54	5 - 125	Filter = 2.87 Lubricator = 6.00	8.25	9.43	4.00
Series 0, 2200	C28221-800	1/4"	54	5 - 125	Filter = 2.87 Lubricator = 6.00	8.25	9.43	4.00
Series 44	C28231-800	3/8"	100	5 - 125	Filter = 2.87 Lubricator = 6.00	8.25	9.43	4.00

Accessories

SELF-CLOSING VALVES

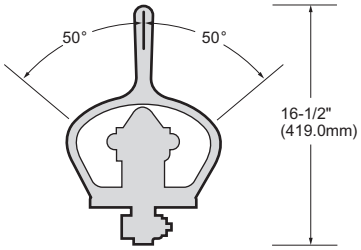

NO. EU-A685

Self-Closing 4-Way Valve. Air inlet pipe tap ¾" NPT, Motor connection pipe tap 1" NPT, exhaust pipe tap ¾" NPT.

MUFFLERS

Part Number	MALE NPT Size
MRV003A-AF350**	⅛"
MRV015A-AC980*	¼"
SRA010A1-A212***	⅜"
MRV040A-AC990**	½"
MOV010AA-674*	½"
3BM-WM07	¾"
3BM-A674*	1"
150BM-A674*	1¼"
SS350-A674*	1½"
ST500-674	2"
SS800-A674*	2½"

* High scfm Capacity
** Medium scfm Capacity
*** Low scfm Capacity

⅜" SQUARE DRIVE ADAPTERS

These ⅜" Square Drive Adapters have a ⅜"-24 female thread, for use with Series M002 and M004 Motors equipped with threaded shafts.

Part Number	Description
R1440-212-1	⅜" square drive, 1" long
R1440-212-3	⅜" square drive, 3" long

NO. K5B-REMOTE

Self-closing 4-Way Valve. Air inlet pipe tap 1½" NPT, Motor connection pipe tap 1½" NPT, exhaust pipe tap 1½" NPT.

ONE-STOP REPLACEMENT COMPONENT SHOPPING?

ARO® motion control and air preparation components include the Alpha® valve, Economair® cylinder and Module Air® air prep lines. Routinely used throughout industry, these lines have made their own name for their precision, durability and overall efficiency.

WWW.AROZONE.COM • 1-800-276-4658

TAPPED EXHAUST DEFLECTORS FOR PIPED AWAY EXHAUST

Motor Series	Part Name	Part Number	Pipe Tap NPT
1801 1841	Exhaust Deflector Assembly	R1801-A123	¾''
3800 3840	Exhaust Deflector Assembly	R3800-A123	¾''
4800 4840	Exhaust Deflector Assembly	R4800-A123	1"

"SPECIAL" AIR MOTORS

While there are over 300 standard Air Motors in the complete Ingersoll-Rand line, we realize that even this broad selection won't fill every need, every time. Virtually all components of our motors, from output shafts and housings to gear ratios, can be modified. Therefore we welcome the opportunity to design and build Air Motors to our customers' specifications when required.

Generally, yearly quantities of 100 plus are cost-effective. However, the opportunity to quote on lower volumes is always welcomed.

Frequently custom designed Air Motors can reduce OEM costs by easing product assembly, increasing performance, and avoiding the need to make special parts to incorporate the Air Motor in a product. We have the engineering capabilities to provide you with truly "turnkey" power units.

VALVES

Part Number	Female NPT Size	Flow Rate	Description
E252LM	1/4"	26 scfm	3-Way Hand Lever/Manual Return
E212LM	1/4"	26 scfm	4-Way Hand Lever/Manual Return
E312LS	1/4"	26 scfm	4-Way, 3-Position Hand Lever, Spring Return
K214LM	1/2"	90 scfm	4-Way Hand Lever/Manual Return
K314LS	1/2"	90 scfm	4-Way, 3-Position Hand Lever, Spring Return
M512LR	1/4"	41 scfm	4-Way, 3-Position Rotary Lever, Manual Return
M513LR	3/8"	65 scfm	4-Way, 3-Position Rotary Lever, Manual Return
M514LR	1/2"	85 scfm	4-Way, 3-Position Rotary Lever, Manual Return

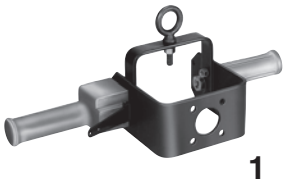
1

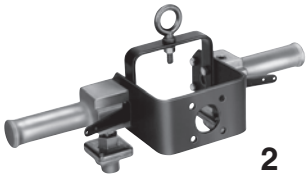
2

3

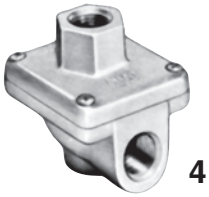
4

5

6

7

1. 41512 Throttle & Bracket Assembly for forward-rotation nutsetting. See motors on pages 28 and 34.

2. 41512-1 Throttle & Bracket Assembly for reversible nutsetting. Has 2 throttle levers and 2 quick-dump exhaust valves. See motors on pages 28 and 34.

3. 42420 3/8" (9.53 mm) diameter Arbor for friction-drive wheels up to 1" (25.40 mm) diameter. See motors on pages 6, 8, 11, 13, and 16.

4. Series 43982-( ) Quick-Exhaust Valves for reversible motors. See chart below.

Valve No.	Port Size, N.P.T.F.		
	Inlet	Cyl.	Exhaust
-1	1/8	1/4	1/4
-2	1/4	1/4	3/8
-3	3/8	3/8	3/8
-5	3/4	3/4	3/4

5. 41784 Square-Drive Adapter. Has 3/4" (19.05 mm) male square drive and fits 7/8" (22.23 mm), length 4-9/16", keyed spindle. See motors on pages 28 and 34.

6. 30712 Hex Ball Lock Adapter. 3/8"-24 mounting thread, 1/4" (6.35 mm) hex drive size. See motors on pages 6, 8, 11, 13, and 16.

7. Square-Drive Adapter. See chart below.

Part No.	Mtg. Thd.	Drive Size
30384-5	3/8" 24	3/8"
30384-9	3/8"-24	1/2"
40768	1/2"-20	1/2"

RECOMMENDED INSTALLATION FOR REVERSIBLE MODELS

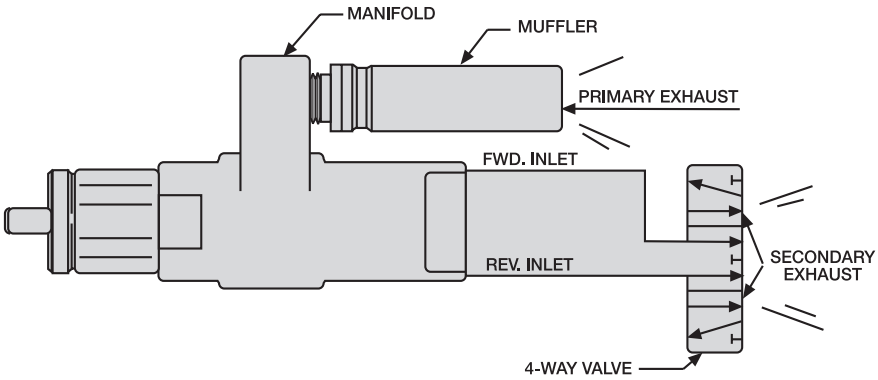

On reversible air motors there are two exhausts. The primary exhaust exhausts air out through the manifold and muffler as in the forward rotation motors. Depending on which direction the motor is running, the opposite inlet port becomes the secondary exhaust and must be opened to atmosphere. A four-way valve, 3-position, spring centered is recommended for all reversible air motors. An exhaust muffler must be threaded into the exhaust port of each valve to comply with the second level regulations as outlined in the Occupational Safety and Health Act of 1970.

WARRANTY

AIR MOTORS

Ingersoll-Rand warrants to the original user its air motors products to be free of defects in material and workmanship for a period of one year from the date of purchase. IR will repair, without cost, any Product found to be defective, including parts and labor charges, or at its option, will replace such Products or refund the purchase price less a reasonable allowance for depreciation, in exchange for the Product. Repairs or replacements are warranted for the remainder of the original warranty period.

If any product proves defective within its original one year warranty period, it should be returned to an appropriate Ingersoll-Rand Service Distributor, transportation prepaid with proof of purchase or warranty card.

This warranty does not apply to Products which IR has determined to have been misused or abused, improperly maintained by the purchaser: or where the malfunction or defect can be attributed to the use of non-genuine IR parts.

IR makes no other warranty, and all implied warranties including any warranty of merchantability or fitness for a particular purpose are limited to the duration of the expressed warranty period as set for the above. IR's maximum liability is limited to the purchase price of the Product and in no event shall IR be liable for any consequential, indirect, incidental, or special damages of any nature arising from the sale or use of the Product, whether based on contract, tort, or otherwise.

Model Number Index

MODEL	PAGE
0-SERIES	17, 62
0/2200-SERIES	19
000-SERIES	12, 60
104257	82
10G	82
10P	82
150BM-A674	84
17RA005	38
17RA008	38
17RA014	38
17RA017	38
17RA022	38
17RB029	38
17RB036	38
17RB045	38
17RB078	38
1801N	30, 31
1801P	30, 31
1801Q	30, 31
1801U	30, 31
1801W	30, 31
1841N	30, 31
1841P	30, 31
1841Q	30, 31
1841U	30, 31
1841W	30, 31
2200/44-SERIES	29
2200-SERIES	25, 27, 64, 65, 66
22N51-W/RC	69
28 1 LB	82
28 8 LB	82
30018	24, 26
30384-5	6, 11, 16
30384-9	6, 11, 16
30712	6, 11, 16
31651	24, 26
31812-1	59, 61
31812-2	59, 61
31812-3	59, 61
31812-4	59, 61
31812-5	59, 61
31812-6	59, 61
31812-7	59, 61
31812-8	59, 61
32968-1	63
32968-2	63
32968-3	63
32968-4	63
32968-5	63
32968-6	63
32968-7	63
32968-8	63
32968-9	63
33907	24, 26
34RA005	38
34RA008	38
34RA011	38
34RA014	38
34RA017	38
34RA022	38
34RB029	38
34RB036	38
34RB045	38
34RB078	38
35264-1	67
35264-2	67
35264-3	67
35264-4	67
35264-5	67
35264-6	67
35264-7	67
35264-8	67
35264-9	67
37892-1	28, 34
37893	24
37894	24
37895-1	18, 26
37896	16
37897	16
37898	11
37899	11
3800M	32, 33
3800P	32, 33
3800Q	32, 33
3800R	32, 33
3800S	32, 33
3800U	32, 33
3840M	32, 33
3840P	32, 33
3840Q	32, 33
3840R	32, 33
3840S	32, 33
3840U	32, 33
3BM-A674	84
3BM-WM07	84
40768	24, 26
41057	6
41058	6
41512	28, 34
41512-1	28, 34
41557	67
41561	61
41563	59, 63
41784	28, 34
42420	11, 16
44-SERIES	35, 68
45058	63
45088	59
45090	67
41559	63
47340	6, 11
47341	16
4800D	36, 37
4800K	36, 37
4800M	36, 37
4800N	36, 37
4800P	36, 37
4800Q	36, 37
4800S	36, 37
4800U	36, 37
4840D	36, 37
4840K	36, 37
4840M	36, 37
4840N	36, 37
4840P	36, 37
4840Q	36, 37
4840S	36, 37
4840U	36, 37
48RA005	40
48RA008	40
48RA011	40
48RA014	40
48RA017	40
48RA022	40

Model Number Index

MODEL	PAGE
48RB029	40
48RB036	40
48RB045	40
48RB078	40
50G	82
50P	82
551SM51-W/RC	70
551SO51-W/RC	70
7533-2-B	59, 60
7533-B	11
7534-2-B	59, 60
7534-B	11
7535-2-C	59, 60
7535-C	11
7536-2-B	59, 60
7536-B	11
7537-2-C	59, 60
7537-C	11
7538-B	11
7539-B	11
7539-B 7540-B	11
7540-B	11
7541-B	11
7542-C	11
7543-B	11
7544-B	11
7545-B	11
7546-B	11
7547-C	11
7800-1B	26
7800-2B	63, 64
7800-3B	66
7800-4B	65, 66
7800-B	24
7801-1B	26
7801-2B	63, 64
7801-3B	65, 66
7801-4B	65, 66
7801-B	24
7802-1B	26
7802-2B	63, 64
7802-3B	66
7802-4B	65, 66
7802-B	24
7803-1B	26
7803-2B	63, 64
7803-3B	65, 66
7803-4B	65, 66
7803-B	24
7804-1B	26
7804-2B	63, 64
7804-3B	65, 66
7804-4B	65
7804-B	24
7805-1B	26
7805-2B	64
7805-3B	65, 66
7805-4B	65, 66
7805-B	24
7806-1B	26
7806-B	24
7807-1B	26
7807-B	24
7808-1B	26
7808-B	24
7809-1B	26
7809-B	24

MODEL	PAGE
7810-1B	26
7810-B	24
7811-1B	26
7811-B	24
7812-1B	26
7812-B	24
7813-1B	26
7813-B	24
7814-1B	26
7814-B	24
7815-1B	26
7815-B	24
7816-1B	26
7816-B	24
7817-1B	26
7817-B	24
8200-4A	68
8200-4A-( )	67
8200-A	34, 35
8201-4A	68
8201-4A-( )	67
8201-A	34, 35
8202-4A	68
8202-4A-( )	67
8202-A	34, 35
8203-4A	68
8203-4A-( )	67
8203-A	35
8204-4A	68
8204-4A-( )	67
8204-A	34, 35
8205-4A	68
8205-4A-( )	67
8205-A	34, 35
8206-A	34, 35
8207-A	34, 35
8208-A	34, 35
8209-A	34, 35
8210-A	34, 35
8211-A	34, 35
8226-10A	18
8226-11A	18
8226-12A	18
8226-13A	18
8226-14A	18
8226-6A	18
8226-7A	18
8226-8A	18
8228-10B	18
8228-11B	18
8228-12B	18
8228-13B	18
8228-14B	18
8228-2B	18
8228-3B	18
8228-5B	18
8228-6B	18
8228-7B	18
8228-8B	18
8228-9B	18
8229-1A	16
8229-2A	16
8229-3A	16
8229-4A	16
8229-5A	16
8229-6A	16
8229-7A	16

Model Number Index

MODEL	PAGE
8229-8A	16
8229-9A	16
8230-1A	16
8230-2A	16
8230-3A	16
8230-4A	16
8230-5A	16
8230-6A	16
8230-7A	16
8230-8A	16
8230-9A	16
8231-1B	16
8231-2B	16
8231-3B	16
8231-4B	16
8231-5B	16
8231-6B	16
8231-7B	16
8231-8B	16
8231-9B	16
8232-( )	62
8232-1	61
8232-2	61
8232-3	61
8232-4	61
8232-5	61
8232-6	61
8232-7	61
8274-1A	28
8274-2A	28
8274-3A	28
8274-4A	28
8274-5A	28
8274-6A	28
8274-A	28
8276-1A	28
8276-2A	28
8276-3A	28
8276-4A	28
8276-5A	28
8276-6A	28
8610-A	6
8611-A	6
8613-A	6
8614-A	6
8616-A	6
8617-A	6
8618-A	6
8828-W2-000	82
8830-W1-000	82
8834-W1-000	82
8842-W1-035	82
8843-W1-035	82
8844-W1-090	82
8846-W1-090	82
92RA005	42
92RA008	42
92RA011	42
92RA014	42
92RA017	42
92RA022	42
92RB029	42
92RB036	42
92RB045	42
92RB078	42
92RM1	44
92RM2	44

MODEL	PAGE
992RM1	44
C28-04-FKG0-28	82
C28221-800	82, 83
C28231-800	82, 83
C28241-800	82
C28453-810	82
C31-08-G00	82
CCM	71, 75
DD6M	71, 75
E212LM	84
E252LM	84
E312LM	84
EE3G	71, 75
EE53G	71, 75
EE59G	71, 75
EE5M	71, 75
EE9G	71, 75
EEM	71, 75
F25111-200	83
F25221-300	82
F25221-400	81, 83
F25231-300	82
F25231-400	81, 83
F25241-300	82
F25241-400	81
F25451-110	81
F25452-310	82
F25461-110	81
F25472-310	82
F35-0B-C28	81
F42-0A-000	81
HH5M	71, 75
HHM	71, 75
K214LM	84
K314LS	84
K5B - FOOT	79
K5B - MANUAL	79
K5B - NEMA - 213	79
K5B - PILOT	79
K5B - SHAFT - 1.625	79
KK5B546	78, 79
KK5B550	78, 79
KK5B550 - B2A0A	79
KK5B550-B2B0A	79
KK6M	71, 75
L26111-100	83
L26221-100	81, 83
L26231-100	81, 83
L26241-100	81
L28-04-LK00-28	81
L28-06-LK00-28	81
L38-08-LL00-28	81
L40-0A-000	81
L40-0B-000	81
M002RHR000AR3	8
M002RHR004AR3	8
M002RHR006AR3	8
M002RHR008AR3	8
M002RHR013AR3	8
M002RHR021AR3	8
M002RHR028AR3	8
M002RHR044AR3	8
M002RHR101AR3	8
M002RHR159AR3	8
M002RVR000AR3	8
M002RVR004AR3	8
M002RVR006AR3	8

Model Number Index

MODEL	PAGE
M002RVR008AR3	8
M002RVR013AR3	8
M002RVR021AR3	8
M002RVR028AR3	8
M002RVR044AR3	8
M002RVR101AR3	8
M002RVR159AR3	8
M004RHR000AR3	13
M004RHR004AR3	13
M004RHR006AR3	13
M004RHR011AR3	13
M004RHR015AR3	13
M004RHR023AR3	13
M004RHR033AR3	13
M004RHR050AR3	13
M004RHR083AR3	13
M004RHR167AR3	13
M004RVR000AR3	13
M004RVR004AR3	13
M004RVR006AR3	13
M004RVR011AR3	13
M004RVR015AR3	13
M004RVR023AR3	13
M004RVR033AR3	13
M004RVR050AR3	13
M004RVR083AR3	13
M004RVR167AR3	13
M007RHR000AR4	20
M007RHR004AR4	20
M007RHR006AR4	20
M007RHR009AR4	20
M007RHR012AR4	20
M007RHR015AR4	20
M007RHR021AR4	20
M007RHR027AR4	20
M007RHR037AR4	20
M007RHR044AR4	20
M007RHR063BR6	20
M007RHR086BR6	20
M007RHR119BR6	20
M007RHR151BR6	20
M007RHR188BR6	20
M007RHR275BR6	20
M007RHR374BR6	20
M007RVR000AR4	20
M007RVR004AR4	20
M007RVR006AR4	20
M007RVR009AR4	20
M007RVR012AR4	20
M007RVR015AR4	20
M007RVR021AR4	20
M007RVR027AR4	20
M007RVR037AR4	20
M007RVR044AR4	20
M007RVR063BR6	20
M007RVR086BR6	20
M007RVR119BR6	20
M007RVR151BR6	20
M007RVR188BR6	20
M007RVR275BR6	20
M007RVR374BR6	20
M512LR	84
M513LR	84
M514LR	84
MLK-K269C	79
MOV005AA	46, 48, 49
MOV010AA-674	84

MODEL	PAGE
MOV075AA	46, 49
MRV003A-AF350	84
MRV015A-AC980	84
MRV040A-AC990	84
MVA017A	46, 49
MVA017B	46, 49
MVA034A	46, 49
MVA034B	46, 49
P29112-100	83
R1440-212-1	84
R1440-212-3	84
R1801-A123	84
R27111-100	83
R27221-600	81, 83
R27231-600	81, 83
R27241-600	81
R27251-100	81
R30-0A-G00	81
R3800-A123	84
R38-06-F0G0-28	81
R38-08-F0G0-28	81
R40-0B-G00	81
R4800-A123	84
SERIES 17RA, 17RB, 34RA, 34RB	39
SERIES 1801 AND 1841	31
SERIES 3800 AND 3840	33
SERIES 4800 AND 4840	37
SERIES 48RA AND 48RB	41
SERIES 551	70
SERIES 92RA AND 92RB	43
SERIES 92RM AND 992RM	45
SERIES M002	10
SERIES M004	15
SERIES M007	23
SERIES MVA	47
Series MRV	50 - 56
SRA010A1-A212	84
SS350-A674	84
SS800-A674	84
ST500-674	84
UWD - A686	79

Ingersoll Rand

QuickCross Competitive Crossover

Please check which type of product(s) you want crossed-over. Provide the competitor name and provide their model number. IR will respond to this request within 2-hrs.

Compressors ☐

Atlas Copco
Campbell-Hausfield
Champion
Coleman
Fiac
Porter Cable

Impact Wrenches ☐

Atlas Copco
ATP
Cleco
CP
Sioux
Uryu

Assembly Tools ☐

Aimco
Atlas Copco
Cleco
CP
Desoutter
Dotco

Finishing Tools ☐

ATP
ATSCO
Cooper
CP
Dotco
Dynabrade

Lifting Equipment ☐

Budgit
CM
Coffing
Demag
Gardner-Denver

Accessories ☐

Arrow
Master
Pneumatics
Norgren
Parker
SMC

Air Motors ☐

Atlas Copco
Cooper
Gast

Competitor Name	Competitor Model	IR Model *	Net Price *

* *For Internal use only*

Distributor Information:

Company_____

City/State_____

Contact_____

Phone_____

Fax_____

CROSS REFERENCE TYPE :
(FOR INTERNAL USE)

DIRECT ☐

FUNCTIONAL ☐

Fax to: (615) 672-7678
Or Email: ircrossover@irco.com
***Orders should be checked for function and dimensional fit before ordering**

QuickCross Online at www.irtools.com

Disclaimer: Nothing contained within this brochure is intended to extend any warranty or representation, expressed or implied, regarding the products described herein. Any such warranties or other terms or conditions of the sale of products shall be in accordance with Ingersoll-Rand Standard Terms and Conditions of Sale for such products which are available upon request.

Product improvement is a continuing goal at Ingersoll-Rand. Designs and specifications are subject to change without notice or obligation.

Ingersoll Rand
Industrial Technologies

Ingersoll Rand Industrial Technologies provides products, services, and solutions to enhance the efficiency and productivity of our commercial, industrial, and process customers. Our innovative products include air compressors, air systems components, tools, pumps, material and fluid handling systems and microturbines.

www.irtools.com/aro
www.airmotors.com
www.irhoist.com
www.arozone.com

FORM IND-0305-063

© 2007 Ingersoll Rand Company